Frymaster®

We Fit the Way You Fry™

Pro H55-Series

Gas Fryer

Installation, Operation and Maintenance Manual

This manual is updated as new information, and models are released. Visit our website for the latest manual.

This equipment chapter is to be installed in the Fryer Section of the *Equipment Manual*.

⚠ CAUTION

READ THE INSTRUCTIONS BEFORE USING THE FRYER.

Read these instructions for use carefully so as to familiarize yourself with the appliance before connecting it to its gas supply.

Keep these instructions for future reference.

FOR YOUR SAFETY

Do Not Store or use gasoline or other flammable vapors and liquids in the vicinity of this or any other appliance.

8 1 9 5 9 9 1

Part Number: FRY_IOM_8195991 09/2026

Original Instructions

Ali GROUP

WELBILT an Ali Group Company

NOTICE

IF, DURING THE WARRANTY PERIOD, THE CUSTOMER USES A PART FOR THIS FRYMASTER DEAN EQUIPMENT OTHER THAN AN UNMODIFIED NEW OR RECYCLED PART PURCHASED DIRECTLY FROM FRYMASTER DEAN, OR ANY OF ITS AUTHORIZED SERVICERS, AND/OR THE PART BEING USED IS MODIFIED FROM ITS ORIGINAL CONFIGURATION, THIS WARRANTY WILL BE VOID. FURTHER, FRYMASTER DEAN AND ITS AFFILIATES WILL NOT BE LIABLE FOR ANY CLAIMS, DAMAGES OR EXPENSES INCURRED BY THE CUSTOMER WHICH ARISE DIRECTLY OR INDIRECTLY, IN WHOLE OR IN PART, DUE TO THE INSTALLATION OF ANY MODIFIED PART AND/OR PART RECEIVED FROM AN UNAUTHORIZED SERVICE CENTER.

NOTICE

This appliance is intended for professional use only and is to be operated by qualified personnel only. A Frymaster Factory Authorized Servicer (FAS) or other qualified professional should perform installation, maintenance, and repairs. Installation, maintenance, or repairs by unqualified personnel may void the manufacturer's warranty. See Chapter 1 of this manual for definitions of qualified personnel.

NOTICE

This equipment must be installed in accordance with the appropriate national and local codes of the country and/or region in which the appliance is installed. See NATIONAL CODE REQUIREMENTS in Chapter 2 of this manual for specifics.

NOTICE TO U.S. CUSTOMERS

This equipment is to be installed in compliance with the basic plumbing code of the Building Officials and Code Administrators International, Inc. (BOCA) and the Food Service Sanitation Manual of the U.S. Food and Drug Administration.

⚠ DANGER

Instructions to be followed in the event the operator smells gas or otherwise detects a gas leak must be posted in a prominent location. This information can be obtained from the local gas company or gas supplier.

⚠ WARNING

Improper installation, adjustment, alteration, service or maintenance can cause property damage, injury, or death. Read the installation, operating, and maintenance instructions thoroughly before installing or servicing this equipment. Only qualified service personnel may convert this appliance to use a gas other than that for which it was originally configured.

⚠ FOR YOUR SAFETY

Do not store or use gasoline or other flammable liquids or vapors in the vicinity of this or any other appliance.

⚠ DANGER

The front ledge of the fryer is not a step! Do not stand on the fryer. Serious injury can result from slips or contact with the hot oil.

⚠ DANGER

No structural material on the fryer should be altered or removed to accommodate placement of the fryer under a hood. Questions? Call the Frymaster Dean Service Hotline at 1-800-551-8633.

NOTICE

Drawings and photos used in this manual are intended to illustrate operational, cleaning and technical procedures and may not conform to onsite management operational procedures.

NOTICE TO OWNERS OF UNITS EQUIPPED WITH COMPUTERS

U.S.

This device complies with Part 15 of the FCC rules. Operation is subject to the following two conditions: 1) This device may not cause harmful interference, and 2) This device must accept any interference received, including interference that may cause undesired operation. While this device is a verified Class A device, it has been shown to meet the Class B limits.

CANADA

This digital apparatus does not exceed the Class A or B limits for radio noise emissions as set out by the ICES-003 standard of the Canadian Department of Communications.

Cet appareil numerique n'emet pas de bruits radioelectriques depassany les limites de classe A et B prescrites dans la norme NMB-003 edictee par le Ministre des Communcations du Canada.

⚠ DANGER

Do not spray aerosols in the vicinity of this appliance while it is in operation.

⚠ DANGER

The crumb tray in fryers equipped with a filter system must be emptied into a fireproof container at the end of frying operations each day. Some food particles can spontaneously combust if left soaking in certain shortening material.

⚠ WARNING

Do not bang fry baskets or other utensils on the fryer's joiner strip. The strip is present to seal the joint between the fry vessels. Banging fry baskets on the strip to dislodge shortening will distort the strip, adversely affecting its fit. It is designed for a tight fit and should only be removed for cleaning.

NOTICE

The Commonwealth of Massachusetts requires any and all gas products to be installed by a licensed plumber or pipe fitter.

⚠ WARNING

This appliance is not intended for use by children under the age of 16 or persons with reduced physical, sensory or mental capabilities, or lack of experience and knowledge, unless they have been given supervision concerning use of the appliance by a person responsible for their safety. Do not allow children to play with this appliance.

⚠ WARNING

After installation of a gas fryer and after any maintenance to the gas system of a gas fryer-manifold, valve, burners, etc. – check for gas leaks at all connections. Apply a thick soapy solution to all connections and ensure there are no bubbles. There should be no smell of gas.

⚠ DANGER

When installed, this appliance must be electrically grounded in accordance with local codes, or in the absence of local codes, with the National Electrical Code, ANSI/NFPA 70, the Canadian Electrical Code, CSA C22.2 as applicable.

⚠ DANGER

When installed, this appliance must conform with local codes, or in the absence of local codes, with the National Fuel Gas Code, ANSI Z223.1/NFPA54, or the Natural Gas and Propane Installation Code, CSA B149.1 as applicable or the appropriate national code of the country in which installed.

NOTICE

The appliance must be installed and used in such a way that any water cannot contact the fat or oil.

⚠ WARNING

If the electrical power supply cord is damaged, it must be replaced by a Frymaster Factory Authorized Servicer or a similarly qualified person in order to avoid a hazard.

⚠ DANGER

Adequate means must be provided to limit the movement of the appliance without depending upon the gas line connector and the quick-disconnect device or its associated piping to limit the appliance movement.

All fryers equipped with casters must be stabilized by installing restraining chains. If a flexible gas line is used, an additional restraining cable must be connected at all times when the fryer is in use.

All fryers equipped with casters must be installed using a connector that complies with the Standard for Connectors for Moveable Gas Appliances, ANSI Z21.69 or CSA 6.16, and a quick-disconnect device that complies with the Standard for Quick-Disconnect Devices for Use with Gas Fuel, ANSI Z21.41 or CSA 6.9.

NOTICE

This appliance is intended to be used for commercial applications, for example in kitchens of restaurants, canteens, hospitals and in commercial enterprises such as bakeries, butcheries, etc., but not for continuous mass production of food.

⚠ DANGER

This appliance must be connected to a power supply having the same voltage and phase as specified on the rating plate located on the inside of the appliance door.

⚠ WARNING

Use caution and wear appropriate safety equipment to avoid contact with hot oil or surfaces that may cause severe burns or injury.

⚠ WARNING

Do not block the area around the base or under the fryers.

⚠ WARNING

Operation, installation, and servicing of this product may expose you to chemicals/products including [Bisphenol A (BPA), glass wool or ceramic fibers, and crystalline silica], which is [are] known to the State of California to cause cancer, birth defects or other reproductive harm. For more information go to www.P65Warnings.ca.gov.

⚠ WARNING

Do not store or set baskets or anything else on top of the flues.

PRO H55 SERIES GAS FRYER
INSTALLATION & OPERATION MANUAL
TABLE OF CONTENTS

CHAPTER 1: General Information
1.1 Applicability and Validity 1-1
1.2 Parts Ordering and Service Information 1-1
1.3 Safety Information 1-2
1.4 European Community (CE) and UKCA Specific Information 1-2
1.5 Equipment Description 1-3
1.6 Installation, Operating, and Service Personnel 1-3
1.7 Definitions 1-3
1.8 Shipping Damage Claim Procedure 1-4
CHAPTER 2: Installation Instructions
2.1 General Installation Requirements 2-1
2.2 Caster/Leg Installation 2-3
2.3 Pre-Connection Preparations 2-3
2.4 Connection to Gas Line 2-5
2.5 Converting to Another Gas Type 2-8
CHAPTER 3: Operating Instructions
3.1 Controller Operation and Programming 3-1
3.2 Start-Up Procedure 3-1
3.3 Boiling Out the Frypot 3-3
3.4 Shutting the Fryer Down 3-3
CHAPTER 4: Filtration Instructions
4.1 Draining and Manual Filtering 4-1
4.2 Preparing the Built-In Filtration System for Use 4-2
4.3 Operation of the Filter 4-5
4.4 Disassembly and Reassembly of the Magnasol Filter 4-8
4.5 Draining and Disposing of Waste Oil 4-9
4.6 Using the Optional Rear-Discharge Oil Disposal 4-10
CHAPTER 5: Preventive Maintenance
5.1 Fryer Preventive Maintenance Checks and Service 5-1
Daily Checks and Service 5-1
Weekly Checks and Service 5-1
Monthly Checks and Service 5-3
Quarterly Checks and Service 5-4
Semi-Annual Checks and Service 5-6
5.2 Built-In Filtration System Preventive Maintenance Checks and Service 5-6
5.3 Annual/Periodic System Inspection 5-7
CHAPTER 6: Operator Troubleshooting
6.1 Introduction 6-1
6.2 Troubleshooting Fryers with Computer Magic III.5, Basket Lift Timer, or Digital Controller 6-2
6.3 Troubleshooting Fryers with Solid State (Analog) Controller 6-4
6.4 Troubleshooting the Built-In Filtration System 6-6
6.5 Troubleshooting the Basket Lift 6-8

PRO H55 SERIES GAS FRYER
CHAPTER 1: GENERAL INFORMATION

1.1 Applicability and Validity

The Pro H55 Series Gas Fryer has been approved by the European Union and the United Kingdom for sale and installation in the following countries: AT, BE, DE, DK, ES, FI, FR, GB, IE, IT, LU, NL, NO, PT and SE.

This manual is applicable to and valid for all Pro H55 Series Gas Fryers sold in English-speaking countries, including those in the European Union and the United Kingdom. Where conflicts exist between instructions and information in this manual and local or national codes of the country in which the equipment is installed, installation and operation shall comply with those codes.

This appliance is only for professional use and shall be used by qualified personnel only, as defined in Section 1.7.

1.2 Parts Ordering and Service Information

In order to assist you quickly, the Frymaster Factory Authorized Servicer (FAS) or Service Department representative requires certain information about your equipment. Most of this information is printed on a data plate affixed to the inside of the fryer door. Part numbers are found in the Installation, Operation, Service, and Parts Manual. Parts orders may be placed directly with your local FAS or distributor. A list of Frymaster Factory Authorized Servicers (FAS's) is located on the Frymaster website at www.frymaster.com. If you do not have access to this list, contact the Frymaster Service Department at 1-800-551-8633 or 1-318-865-1711 or by e-mail: service@frymaster.com.

When ordering parts, the following information is required:

Model Number: _____
Serial Number: _____
Type of Gas or Voltage: _____
Item Part Number: _____
Quantity Needed: _____

Service information may be obtained by contacting your local FAS/Distributor. Service may also be obtained by calling the Frymaster Service Department at 1-800-551-8633 or 1-318-865-1711 or by e-mail: service@frymaster.com. When requesting service, please have the following information ready:

Model Number: _____
Serial Number: _____
Type of Gas: _____

In addition to the model number, serial number, and type of gas, please be prepared to describe the nature of the problem and have ready any other information that you think may be helpful in solving your problem.

RETAIN AND STORE THIS MANUAL IN A SAFE PLACE FOR FUTURE USE.

1.3 Safety Information

Before attempting to operate your unit, read the instructions in this manual thoroughly. Throughout this manual, you will find notations enclosed in double-bordered boxes similar to the ones that follow.

⚠ CAUTION

CAUTION boxes contain information about actions or conditions that ***may cause or result in a malfunction of your system.***

⚠ WARNING

WARNING boxes contain information about actions or conditions that ***may cause or result in damage to your system***, and which may cause your system to malfunction.

⚠ DANGER

DANGER boxes contain information about actions or conditions that ***may cause or result in injury to personnel***, and which may cause damage to your system and/or cause your system to malfunction.

Your fryer is equipped with automatic safety features:

1. High temperature detection shuts off gas to the burner assembly should the controlling thermostat fail.

2. An optional safety switch built into the drain valve prevents burner ignition with the drain valve even partially open.

1.4 European Community (CE) or the United Kingdom Specific Information

The European Community (CE) and the United Kingdom have established certain specific standards regarding equipment of this type. Whenever a conflict exists between CE, the United Kingdom and non-CE standards, the information or instructions concerned are identified by means of shadowed boxes similar to the one below.

Non-CE Standard for Incoming Gas Pressures

Type	Minimum	Maximum
Natural	6" W.C. 1.49 kPa 14.68 mbar	14" W.C. 3.49 kPa 34.72 mbar
LP	11" W.C. 2.74 kPa 27.28 mbar	14" W.C. 3.49 kPa 34.84 mbar

1.5 Equipment Description

Pro H55 Series high-efficiency gas fryers employ a unique infrared burner system that uses up to 43% less energy to cook the same volume as conventional open-burner fryers. Models in this series include PH55, FMPH55, and FPPH55 variants. PH55 models have no built-in filtration system. FPPH55 models have a built-in FootPrint Pro filtration system located under the leftmost two ***fryers*** in a battery. FMPH55 models also have a built-in FootPrint Pro filtration system under the leftmost two ***stations*** of a battery. The difference between FPPH55s and FMPH55s is that FPPH55s have no holding stations (i.e., the battery consists only of fryers) while the FMPH55s have a holding station at one of the positions in the battery. For example, an FPPH355 consists of three fryers with built-in filtration; an FMH355, by comparison, consists of two fryers and one holding station with built-in filtration. A PH355 consists of three fryers without built-in filtration.

All Pro H55 Series Gas fryers are of an open-frypot design with no tubes and have a hand-sized opening into the deep cold zone, which makes cleaning the stainless frypot quick and easy.

Heating is supplied by a pair of infrared burner assemblies mounted on each side of the frypot. Combustion air for the burners is supplied by a dedicated blower mounted on the front of the frypot. Pro H55 Series Gas fryers can be configured for natural gas, propane (LP), or manufactured gas, as required by the customer.

Each frypot is equipped with a temperature probe for precise temperature control.

All Pro H55 Series Gas fryers come standard with electronic ignition, melt cycle and boil-out mode. Control options include Computer Magic III.5 computers, solid-state (analog) controllers, digital controllers, and basket lift timers.

All fryers in this series require an external source of AC electrical power. Units can be configured for voltages ranging from 100 VAC to 240 VAC.

FMPH55 and FPPH55 fryers are shipped completely assembled. PH55 fryers may require installation of legs or optional casters at the point of use. All fryers are shipped with a package of standard accessories. Each fryer is adjusted, tested, and inspected at the factory before crating for shipment.

1.6 Installation, Operating, and Service Personnel

Operating information for Frymaster equipment has been prepared for use by qualified and/or authorized personnel only, as defined in Section 1.7. **All installation and service on Frymaster equipment must be performed by qualified, certified, licensed, and/or authorized installation or service personnel, as defined in Section 1.7.**

1.7 Definitions

QUALIFIED AND/OR AUTHORIZED OPERATING PERSONNEL

Qualified/authorized operating personnel are those who have carefully read the information in this manual and have familiarized themselves with the equipment functions, or who have had previous experience with the operation of the equipment covered in this manual.

QUALIFIED INSTALLATION PERSONNEL

Qualified installation personnel are individuals, firms, corporations, and/or companies which, either in person or through a representative, are engaged in and are responsible for the installation of gas-fired appliances. Qualified personnel must be experienced in such work, be familiar with all gas precautions involved, and have complied with all requirements of applicable national and local codes.

QUALIFIED SERVICE PERSONNEL

Qualified service personnel are those who are familiar with Frymaster equipment and who have been authorized by Frymaster, L.L.C. to perform service on the equipment. All authorized service personnel are required to be equipped with a complete set of service and parts manuals, and to stock a minimum amount of parts for Frymaster equipment. A list of Frymaster Factory Authorized Servicers (FAS's) is located on the Frymaster website at www.frymaster.com. ***Failure to use qualified service personnel will void the Frymaster warranty on your equipment.***

1.8 Shipping Damage Claim Procedure

Your Frymaster equipment was carefully inspected and packed before leaving the factory. The transportation company assumes full responsibility for safe delivery upon its acceptance of the equipment for transport.

What to do if your equipment arrives damaged:

1. **File a claim for damages immediately**, regardless of the extent of damages.
2. **Inspect for and record all visible loss or damage**, and ensure that this information is noted on the freight bill or express receipt and is signed by the person making the delivery.
3. **Concealed loss or damage** that was unnoticed until the equipment was unpacked should be recorded and reported to the freight company or carrier **immediately** upon discovery. A concealed damage claim must be submitted within 5 days of the date of delivery. Ensure that the shipping container is retained for inspection.

Frymaster **DOES NOT ASSUME RESPONSIBILITY FOR DAMAGE OR LOSS INCURRED IN TRANSIT.**

PRO H55 SERIES GAS FRYER
CHAPTER 2: INSTALLATION INSTRUCTIONS

2.1 General Installation Requirements

Qualified, licensed, and/or authorized installation or service personnel, as defined in Section 1.7 of this manual, should perform all installation and service on Frymaster equipment.

Conversion of this appliance from one type of gas to another should only be performed by qualified, licensed, and/or authorized installation or service personnel as defined in Section 1.7 of this manual.

Failure to use qualified, licensed, and/or authorized installation or service personnel (as defined in Section 1.7 of this manual) to install, convert to another gas type or otherwise service this equipment will void the Frymaster warranty and may result in damage to the equipment or injury to personnel.

Where conflicts exist between instructions and information in this manual and local or national codes or regulations, installation and operation shall comply with the codes or regulations in force in the country in which the equipment is installed.

⚠ DANGER
Building codes prohibit a fryer with its open tank of hot oil being installed beside an open flame of any type, including those of broilers and ranges.

Upon arrival, inspect the fryer carefully for visible or concealed damage. (See **Shipping Damage Claim Procedure** in Chapter 1.)

⚠ DANGER
Frymaster appliances equipped with legs are for stationary installations. Appliances fitted with legs must be lifted during movement to avoid damage to the appliance and bodily injury. For movable installations, optional equipment casters must be used. Questions? Call 1-800-551-8633.

CLEARANCE AND VENTILATION

The fryer(s) must be installed with a 6” (150 mm) clearance at both sides and back when installed adjacent to combustible construction; no clearance is required when installed adjacent to noncombustible construction. A minimum of 24” (600 mm) clearance should be provided at the front of the fryer.

⚠ DANGER
No structural material on the fryer should be altered or removed to accommodate placement of the fryer under a hood. Questions? Call the Frymaster Dean Service Hotline at 1-800-551-8633.

One of the most important considerations of efficient fryer operation is ventilation. Make sure the fryer is installed so that products of combustion are removed efficiently, and that the kitchen ventilation system does not produce drafts that interfere with burner operation.

The fryer flue opening must not be placed close to the intake of the exhaust fan, and the fryer must never have its flue extended in a "chimney" fashion. An extended flue will change the combustion characteristics of the fryer, causing longer recovery time. It also frequently causes delayed ignition. To provide the airflow necessary for good combustion and burner operation, the areas surrounding the fryer front, sides, and rear must be kept clear and unobstructed.

⚠ DANGER

This appliance must be installed with sufficient ventilation to prevent the occurrence of unacceptable concentrations of substances harmful to the health of personnel in the room in which it is installed.

Fryers must be installed in an area with an adequate air supply and adequate ventilation. Adequate distances must be maintained from the flue outlet of the fryer to the lower edge of the ventilation filter bank. Filters should be installed at an angle of 45º. Place a drip tray beneath the lowest edge of the filter. For U.S. installation, NFPA standard No. 96 states, "A minimum distance of 18 in. (450 mm) should be maintained between the flue outlet and the lower edge of the grease filter." *Frymaster recommends that the minimum distance be 24 in. (600 mm) from the flue outlet to the bottom edge of the filter when the appliance consumes more than 120,000 BTU per hour*.

For installations in the United States, information on construction and installation of ventilating hoods can be found in the NFPA standard cited above. A copy of the standard may be obtained from the National Fire Protection Association, Battery March Park, Quincy, MA 02269.

NATIONAL CODE REQUIREMENTS

The type of gas for which the fryer is equipped is stamped on the data plate attached to the inside of the fryer door. Connect a fryer stamped "NAT" only to natural gas, those stamped "PRO" only to propane gas, and those stamped "MFG" only to manufactured gas.

Installation shall be made with a gas connector that complies with national and local codes, and, where applicable, CE or UKCA codes. Quick-disconnect devices, if used, shall likewise comply with national, local, and, if applicable, CE or UKCA codes. In the absence of local codes, installation must conform to the national Fuel Gas Code, ANSI Z223.1/NFPA 54 or the Natural Gas and Propane Installation code, CSA B149.1, as applicable including:

1. The appliance and its individual shutoff valve must be disconnected form the gas supply piping system during any pressure testing of the system at test pressures in excess of ½ psi (3.5 kPa).

2. The appliance must be isolated from the gas supply piping system by closing its individual manual shutoff valve during any pressure testing of the gas supply piping system at test pressures equal to or less than ½ psi (3.5 kPa).

ELECTRICAL GROUNDING REQUIREMENTS

All electrically operated appliances must be grounded in accordance with all applicable national and local codes, and, where applicable, CE or UKCA codes. In the absence of local codes, the appliance must be grounded in accordance with National Electrical Code, ANSI/NFPA 70, or the Canadian Electrical Code, CSA C22.2, as applicable. All units (cord connected or permanently connected)

should be connected to a grounded power supply system. A wiring diagram is located on the inside of the fryer door. Refer to the rating plate on the inside of the fryer door for proper voltages.

⚠ DANGER

This appliance is equipped with a three-prong (grounding) plug for your protection against electrical shock and must be plugged directly into a properly grounded three-prong receptacle. Do not cut, remove, or otherwise bypass the grounding prong on this plug!

⚠ DANGER

This appliance requires electrical power for operation. Place the gas control valve in the OFF position in case of a prolonged power outage. Do not attempt to operate this appliance during a power outage.

AUSTRALIAN REQUIREMENTS

To be installed in accordance with AS 5601 / AG 601, local authority, gas, electricity, and any other relevant statutory regulations.

If casters are fitted, the installation must comply with AS5601 and AS1869 requirements.

SOUTH AFRICA REQUIREMENTS

IMPORTANT INFORMATION FOR THE USER
This appliance may only be installed by a registered SAQCC Gas installer. All registered installers are issued with a card carrying their registration number. Ask to be shown the card before allowing the installation work to commence and make a note of the Installer registration number. Upon completion of the installation, the installer is required to explain the operational details of the appliance together with the safety instructions. You will be asked to sign acceptance of the installation and be provided with a completion certificate. You should only sign for acceptance of the installation when the installation is completed to your satisfaction.
Note that your invoice is required in the event that you wish make a guarantee claim.

IMPORTANT INFORMATION FOR THE INSTALLER.
This appliance may only be installed by a gas installer registered with the South African qualification and certification committee (SAQCC). The appliance must be installed in accordance with the requirements of SANS 10087-1for use with LPG, SANS 827 for use with NG and any fire department regulations and/or local bylaws applicable to the area. If in doubt, check with the relevant authority before undertaking the installation. Upon completion of the installation you are required to fully explain and demonstrate to the user the operational details and safety practices applicable to the appliance and the installation.

FCC COMPLIANCE

The user is cautioned that any changes or modifications to Frymaster computers not expressly approved by the party responsible for compliance could void the user's authority to operate the equipment.

Frymaster computers have been tested and found to comply with the limits for a Class A digital device, pursuant to Part 15 of the FCC rules. While these devices are verified as Class A devices, they have been shown to meet the Class B limits. These limits are designed to provide reasonable

protection against harmful interference when the equipment is operated in a commercial environment. This equipment generates, uses, and can radiate radio frequency energy and, if not installed and used in accordance with the instruction manual, may cause harmful interference to radio communications. Operation of the equipment in a residential area is likely to cause harmful interference in which case the user will be required to correct the interference at his own expense.

The user may find the booklet "How to Identify and Resolve Radio-TV Interference Problems" helpful. It is prepared by the Federal Communications Commission and is available from the U.S. Government Printing Office, Washington, DC 20402, Stock No. 004-000-00345-4.
If necessary, the user should consult the dealer or an experienced radio and television technician for additional suggestions.

2.2 Caster/Leg Installation

Depending upon the specific configuration ordered, your fryer may have been shipped without installed casters or legs. **DO NOT INSTALL THIS APPLIANCE WITHOUT CASTERS OR LEGS. If the appliance requires the installation of casters or legs, install them in accordance with the instructions included in your accessory package.**

On an appliance with casters; the installation shall be made with a connector that complies with the Standard for Moveable Gas Appliances, ANSI Z21.69 • CSA 6.16, and a quick disconnect device that complies with the Standard for Quick-Disconnect Devices for Use With Gas Fuel, ANSI Z21.41 • CSA 6.9.

The front right caster may be locked with setscrews that may need to be loosened to move into place. Once in place, the caster setscrews can be locked with the caster wheel parallel to the fryer from front to back to ease moving the fryer in and out of the hood for cleaning and preventing the caster from hitting the oil reservoir.

2.3 Pre-Connection Preparations

⚠ DANGER
DO NOT connect this appliance to the gas supply before completing each step in this section.

After the fryer has been positioned under the exhaust hood, ensure the following has been accomplished:

1. Adequate means must be provided to limit the movement of fryers without depending upon the gas line connections. If a flexible gas hose is used, a restraining cable must be connected at all times when the fryer is in use. The restraining cable and installation instructions are packed with the flexible hose in the accessories box that was shipped with your unit.
2. ***Single unit*** fryers must be stabilized by installing restraining chains on fryers equipped with casters or anchor straps on fryers equipped with legs. Follow the instructions in the accessory pack to install the chains or straps.

⚠ DANGER
Do not attach an apron drainboard to a single fryer. The fryer may become unstable, tip over, and cause injury. The appliance area must be kept free and clear of combustible material at all times.

3. Level fryers equipped with legs by screwing out the legs approximately 1 inch then adjusting them so that the fryer is level and at the proper height in the exhaust hood. Frymaster recommends that the minimum distance from the flue outlet to the bottom edge of the hood be 24 in. (600 mm) when the appliance consumes more than 120,000 BTU per hour. **NOTE:** There are no built-in leveling devices on fryers equipped with casters. The floor where the fryer is to be installed must be level.

4. Test the fryer electrical system:
   a. Plug the fryer electrical cord(s) into a grounded electrical receptacle.
   b. Place the power switch in the **ON** position.
      - For fryers equipped with solid-state (analog) controls, verify that the power and heat lights are lit.
      - For fryers having computer or digital displays, verify that the display indicates CYCL.
   c. Place the fryer power switch in the **OFF** position. Verify that the power and heat lights are out, or that the display is blank.

5. Refer to the data plate on the inside of the fryer door to determine if the fryer burner is configured for the proper type of gas before connecting the fryer quick-disconnect device or piping from the gas supply line.

6. Verify the minimum and maximum gas supply pressures for the type of gas to be used in accordance with the accompanying tables.

Non-CE Standard for Incoming Gas Pressures

Gas	Minimum	Maximum
Natural	6" W.C. 1.49 kPa 14.93 mbar	14" W.C. 3.48 kPa 34.84 mbar
LP	11" W.C. 2.74 kPa 27.37 mbar	14" W.C. 3.48 kPa 34.84 mbar

Korea Standard for Incoming Gas Pressures

Gas	Minimum	Maximum
LNG (Natural)	4" W.C. 1.00 kPa 10.00 mbar	10" W.C. 2.50 kPa 25.00 mbar
LPG (Propane)	9.2" W.C. 2.30 kPa 23.00 mbar	13.2" W.C. 3.30 kPa 33.00 mbar

CE Standard for Incoming Gas Pressures for Fryers Manufactured After April 1999

Gas	Incoming Pressure (mbar)(1)	Rate (kW Net)	Orifice Qty	Orifice Diameter		Regulator Pressure	
				Single Vat	Dual Vat	Single Vat	Dual Vat
G20	20	19.7	2	3.40	3.40	7 mbar	7 mbar
G25	20 or 25	19.7	2	3.40	3.40	10 mbar	10 mbar
G30**	28/30 or 50	19.7	2	2.05	2.05	17 mbar	17 mbar
G31	37 or 50	19.7	2	2.05	2.05	20 mbar	20 mbar

(1) mbar = 10,2 mm H2O
** Except Category 3B/P, then 21.4kW

UKCA Standard for Incoming Gas Pressures for Fryers Manufactured After April 1999							
				Orifice Diameter		Regulator Pressure	
Gas	Incoming Pressure (mbar)(1)	Rate (kW Net)	Orifice Qty	Single Vat	Dual Vat	Single Vat	Dual Vat
G20	20	19.7	2	3.40	3.40	7 mbar	7 mbar
G25	20 or 25	19.7	2	3.40	3.40	10 mbar	10 mbar
G30**	28/30 or 50	19.7	2	2.05	2.05	17 mbar	17 mbar
G31	37 or 50	19.7	2	2.05	2.05	20 mbar	20 mbar

(1) mbar = 10,2 mm H2O
** Except Category 3B/P, then 21.4kW

7. For fryers equipped with a FootPrint Pro system or basket lifts, plug the electrical cord(s) into a power receptacle behind the fryer

2.4 Connection to Gas Line

⚠ DANGER

Before connecting new pipe to this appliance, the pipe must be blown out thoroughly to remove all foreign material. Foreign material in the burner and gas controls will cause improper and dangerous operation.

⚠ DANGER

When pressure-testing incoming gas supply lines, disconnect the fryer from the gas line if the test pressure will be ½ PSIG (3.45 kPa, 13.84 inches W.C.) or greater to avoid damage to the fryer's gas tubes and gas valve(s).

⚠ DANGER

The appliance and its individual shutoff valve must be disconnected from the gas supply piping system during any pressure testing of that system at test pressures in excess of ½ PSIG (3.5 kPa, 14.07 inches W.C.).

⚠ DANGER

The appliance must be isolated from the gas supply piping system by closing its individual manual shutoff valve during any pressure testing of the gas supply system at test pressures equal to or less than ½ PSIG (3.5 kPa, 14.07 inches W.C.).

⚠ DANGER

All connections must be sealed with a joint compound suitable for the gas being used and all connections must be tested with a solution of soapy water before lighting any pilots.

⚠ DANGER

Never use matches, candles, or any other ignition source to check for leaks. If gas odors are detected:

- **Shut off the gas supply to the appliance at the main shut-off valve or bottle.**
- **Extinguish all naked flames.**
- **Do not operate any electrical appliances in the area.**
- **Ventilate the area.**
- **Check for leaks as detailed in this manual using a solution of soapy solution.**
- **Immediately contact the local gas company or an authorized service agency for service. If odor persists, contact the dealer or gas supplier immediately.**

⚠ DANGER

In the event of a burn-back, where the flame burns back to the jet, immediately turn the gas supply off at the control valve on the panel. After ensuring the flame is extinguished, wait for I minute and re-light the appliance in the normal manner. Should the appliance again burn back, close the control valve and call a service technician. Do not use the appliance again until the service technician has declared that it is safe to do so.

⚠ DANGER

"Dry-firing" your unit will cause damage to the frypot and can cause a fire. Always ensure that melted shortening, cooking oil, or water is in the frypot before firing the unit.

The size of the gas line used for installation is very important. If the line is too small, the gas pressure at the burner manifold will be low. This may cause slow recovery and delayed ignition. The incoming gas supply line should be a minimum of 1½" (38 mm) in diameter. Refer to the chart below for the minimum sizes of connection piping.

Gas Connection Pipe Sizes
(Minimum incoming pipe size should be 1 1/2" (41 mm))

Gas	Single Unit	2 - 3 Units	4 or more units*
Natural	3/4" (22 mm)	1" (28 mm)	1 1/4" (36 mm)
Propane	1/2" (15 mm)	3/4" (22 mm)	1" (28 mm)
Manufactured	1" (28 mm)	1 1/4" (36 mm)	1 1/2" (41 mm)

* For distances of more than 20 feet (6 m) and/or more than 4 fittings or elbows, increase the connection by one pipe size. Units with four or more vats require two gas connections.

The Pro H55 Series gas fryer has received the CE mark for the countries and gas categories indicated in the table below. **NOTE:** The nominal heat input (QN) is 19.7kW except for AT, DE, LU and category 3P/B, which is 21.4kW.

CE Approved Gas Categories by Country

COUNTRIES	CATEGORIES	GAS	PRESSURE (MBAR)
AUSTRIA (AT)	II2H3B/P	G20	20
		G30, G31	50
BELGIUM (BE)	I2E(R)B	G20, G25	20, 25
	I3+	G30, G31	28-30, 37
DENMARK (DK)	II2H3B/P	G20	20
		G30, G31	30
FRANCE (FR)	II2Esi3+	G20, G25	20, 25
		G30, G31	28-30, 37
	II2Esi3P	G20, G25	20, 25
		G31	50
FINLAND (FI)	II2H3B/P	G20	20
		G30, G31	30
GERMANY (DE)	II2ELL3B/P	G20, G25	20
		G30, G31	50
	I3P	G31	50
GREECE (GR)	II2H3+	G20	20
		G30, G31	28-30, 37
ITALY (IT)	II2H3+	G20	20
		G30, G31	28-30, 37
LUXEMBOURG (LU)	II2E3B/P	G20	20
		G30, G31	50
NETHERLANDS (NL)	II2L3P	G25	25
		G31	50
	II2L3B/P	G25	25
		G30, G31	30
NORWAY (NO)	I3B/P	G30, G31	30
PORTUGAL (PT)	II2H3+	G20	20
		G30, G31	28-30, 37
SPAIN (ES)	II2H3+	G20	20
		G30, G31	28-30, 37
	II2H3P	G20	20
		G31	37, 50
SWEDEN (SE)	II2H3B/P	G20	20
		G30, G31	30

CE Standard

Required airflow for the combustion air supply is 2m^3/h per kW.

The Pro H55 Series gas fryer has received the UKCA mark for the countries and gas categories indicated in the table below. **NOTE:** The nominal heat input (QN) is 19.

UKCA Approved Gas Categories by Country			
COUNTRIES	**CATEGORIES**	**GAS**	**PRESSURE (MBAR)**
IRELAND (IE)	II2H3+	G20	20
		G30, G31	28-30, 37
UNITED KINGDOM (UK)	II2H3+	G20	20
		G30, G31	28-30, 37

UKCA Standard
Required airflow for the combustion air supply is 2m^3/h per kW.

SOUTH AFRICA REQUIREMENT (LPG FRYERS ONLY)
This appliance requires an operating pressure of 2,8 kPa at the appliance. A suitable LPG regulator that complies with the requirements of SANS 1237 must be installed.

1. Connect the quick-disconnect hose to the fryer quick-disconnect fitting under the front of the fryer and to the building gas line.

   NOTE: Some fryers are configured for a rigid connection to the gas supply line. These units are connected to the gas supply line at the rear of the unit.

   When using thread compound, use very small amounts on male threads only. Use a pipe thread compound that is not affected by the chemical action of LP gases (Loctite™ PST56765 Sealant is one such compound). DO NOT apply compound to the first two threads. Doing so may allow some of the compound to enter the gas stream, resulting in clogging of burner orifices and/or the control valve.

2. Open the gas supply to the fryer and check all piping, fittings, and gas connections for leaks. A soap solution should be used for this purpose.

3. Close the fryer drain valve and wipe down the inside of the frypot with a clean cloth to remove any residue or debris before first use.

⚠ DANGER
"Dry-firing" your unit will cause damage to the frypot and can cause a fire. Always ensure that melted shortening, cooking oil, or water is in the frypot before firing your unit.

4. The burner manifold pressure should be checked at this time by the local gas company or an authorized service agent. The tables below and on the following page list the burner manifold gas pressures for the various gas types that can be used with this equipment.

CE Standard Burner Manifold Gas Pressures for Fryers Manufactured After April 1999		
	Pressure (mbar)	
Gas	Single Vat	Dual Vat
Natural Gas Lacq (G20) under 20 mbar	7	7
Natural Gas Groningue * (G25) under 25 mbar	10	10
Natural Gas Groningue (G25) under 20 mbar	10	10
Butane (G30) at 28/30 or 50 mbar	17	17
Propane (G31) under 37 or 50 mbar	20	20
* Belgian G25 = 7,0 mbar (single or dual)		

CE Standard Burner Manifold Gas Pressures for Fryers Manufactured Through April 1999		
	Pressure (mbar)	
Gas	Single Vat	Dual Vat
Natural Gas Lacq (G20) under 20 mbar	7	6,5
Natural Gas Gronigue * (G25) under 25 mbar	10	9
Natural Gas Gronigue (G25) under 20 mbar	10	9
Butane (G30) at 28/30 or 50 mbar	17	16,5
Propane (G31) under 37 or 50 mbar	20,2	18,5
* Belgian G25 = 7,0 mbar (single) or 6,5 (dual)		

UKCA Standard Burner Manifold Gas Pressures for Fryers Manufactured After April 1999		
	Pressure (mbar)	
Gas	Single Vat	Dual Vat
Natural Gas Lacq (G20) under 20 mbar	7	7
Natural Gas Gronique * (G25) under 25 mbar	10	10
Natural Gas Gronique (G25) under 20 mbar	10	10
Butane/Propane (G30) at 28/30 or 50 mbar	17	17
Propane (G31) under 37 or 50 mbar	20	20
* Belgian G25 = 7,0 mbar (single or dual)		

Non-CE Standard Burner Manifold Gas Pressures	
Gas	Pressure
Natural	3" W.C. 0.73 kPa
Propane	8.25" W.C. 2.5 kPa

5. Check the programmed temperature or solid-state (analog) controller thermostat setting. (Refer to the separate *Frymaster Fryer Controllers User's Manual* furnished with your unit for the setpoint programming instructions for your particular controller.)

2.5 Converting to Another Gas Type

⚠ DANGER

This appliance was configured at the factory for a specific type of gas. Converting from one type of gas to another requires the installation of specific gas-conversion components.

Switching to a different type of gas without installing the proper conversion components may result in fire or explosion. NEVER ATTACH THIS APPLIANCE TO A GAS SUPPLY FOR WHICH IT IS NOT CONFIGURED!

Conversion of this appliance from one type of gas to another should only be performed by qualified, licensed, and authorized installation or service personnel, as defined in Section 1.7 of this manual.

Pro H55 Series gas fryers manufactured for Non-CE countries prior to 03/2020, use different burners for each type of gas. The burners in fryers built for Propane gas have a special, gray-colored coating on the burner tiles to enable them to withstand the higher caloric value of the Propane gas. Burners designed for use in Propane units may be used in natural gas applications, but not vice versa.

Non-CE Gas Conversion Kits

Natural Gas to Propane (LP) Gas	Propane (LP) Gas to Natural Gas
Full Vat: Part Number 8261145 **prior to 03/2020**	Full Vat: Part Number 8261146
Full Vat: Part Number 8263616 **03/2020-current**	Dual Vat: Part Number 8261148
Dual Vat: Part Number 8261147 **prior to 03/2020**	
Dual Vat: Part Number 8263615 **03/2020-current**	

Units manufactured for export to CE or UKCA countries are equipped with "universal" burners that may be used with either Natural (G20, G25) gas or Butane (G30) and Propane (G31) gasses.

CE Gas Conversion Kits for Units with Gas Valve 810-1715

G20 or G25 (Natural) to G30 or G31 Gas:	G30 or G31 to G20 or G25 (Natural) Gas:
Part Number 826-1196	Part Number 826-1197

CE GAS CONVERSION INSTRUCTIONS

1. Between G20- and G25-type Natural Gas, adjust the gas pressure at the regulator. (Refer to the CE Standard Burner Manifold Gas Pressure Chart.) Do not change the orifice.
2. Between a 2nd family (G20 or G25) and a 3rd family gas (G30 Butane or G31 Propane):
   a. Change the orifices.
   b. Adjust the manifold pressure.
3. Affix the new label included with the conversion kit next to the existing rating plate stating that the gas type has been converted. Remove any references to the previously used gas from the existing rating plate. Conversion rating label PN 802-2144.
4. If the destination language changes, replace the labels. Call your local service agency or KES for a label kit. The language of reference will be on the corner of the label.

UKCA Gas Conversion Kits for Units with Gas Valve 810-1715

G20 or G25 (Natural) to G30 or G31 Gas:	G30 or G31 to G20 or G25 (Natural) Gas:
Part Number 826-1196	Part Number 826-1197

UKCA GAS CONVERSION INSTRUCTIONS

1. Between G20- and G25-type Natural Gas, adjust the gas pressure at the regulator. (Refer to the UKCA Standard Burner Manifold Gas Pressure Chart.) Do not change the orifice.

2. Between a 2nd family (G20 or G25) and a 3rd family gas (G30 Butane or G31 Propane):
   a. Change the orifices.
   b. Adjust the manifold pressure.

3. Affix the new label included with the conversion kit next to the existing rating plate stating that the gas type has been converted. Remove any references to the previously used gas from the existing rating plate. Conversion rating label PN 802-2144.

4. If the destination language changes, replace the labels. Call your local service agency or KES for a label kit. The language of reference will be on the corner of the label.

PRO H55 SERIES GAS FRYER
CHAPTER 3: OPERATING INSTRUCTIONS

3.1 Controller Operation and Programming

Pro H55 Series gas fryers can be equipped with any of the following controlling devices:

- Computer Magic III.5
- Solid State (Analog) Controller
- Digital Controller
- Basket Lift Timer

Refer to the appropriate section of the separate Frymaster Fryer Controllers User's Manual furnished with your fryer for the operating instructions for your specific controller.

3.2 Wipe Down the Frypot

Wipe down the inside of the frypot with a clean cloth to remove any residue or debris before first use.

3.3 Start-Up Procedure

⚠ WARNING

The on-site supervisor is responsible for ensuring that operators are made aware of the inherent hazards of operating a hot oil filtering system, particularly the aspects of oil filtration, draining and cleaning procedures.

⚠ CAUTION

The cooking oil/shortening capacity of the Pro H55 Series gas fryer is 50 lbs. (25 liters) at 70°F (21°C) for a full-vat and 25 lbs. (12.5 liters) at 70°F (21°C) for each half of a dual-vat.

Before lighting the fryer, make sure the fryer is OFF and the frypot drain valve(s) is/are closed. Remove the basket support rack(s), if installed, and fill the frypot to the bottom OIL-LEVEL line.

If solid shortening is being used, make sure it is packed down into the bottom of the frypot.

⚠ WARNING

Never operate this appliance with an empty frypot. The frypot must be filled with water or cooking oil/shortening before lighting the burners. Failure to do so will damage the frypot and may cause a fire.

Lighting the Fryer

1. Press the computer/controller ON/OFF switch to the OFF position.

For CE or UKCA Fryers	For Non-CE Fryers
Placing the ON/OFF switch in the OFF position also turns off the gas valve. Wait five minutes before continuing with Step 2, which will also turn on the gas valve.	After placing the ON/OFF switch in the OFF position, turn the gas valve knob to the OFF position. Wait 5 minutes, then turn the knob to the ON postion and proceed with Step 2.

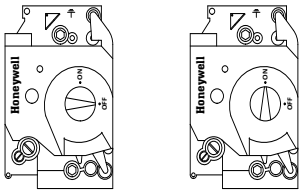

2. Press the computer/controller ON/OFF switch to the ON position and set the thermostat or program the computer for normal cooking temperature.

3. If the burners fail to light, press the ON/OFF switch to the OFF position and wait 60 seconds. Repeat step 2.

4. The fryer will automatically enter the melt cycle mode if the frypot temperature is below 180ºF (82ºC). (**NOTE:** During the melt cycle, the burners will repeatedly fire for a few seconds, then go out for a longer period.) When the frypot temperature reaches 180ºF (82ºC), the unit will automatically switch to the heating mode. The burners will remain lit until the frypot temperature reaches the programmed cooking temperature.

5. After the burners have been lit for at least 90 seconds, observe the flames through the burner viewing ports located on each side of the combustion air blower.

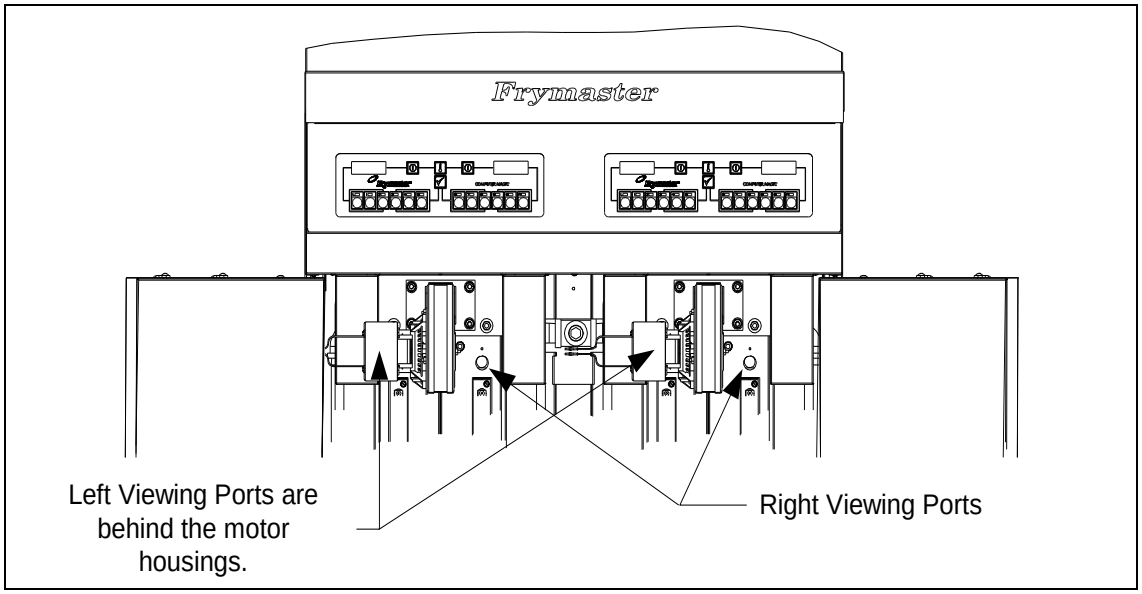

The optimum burn is a bright orange-red glow. If a blue flame is observed, or if there are dark spots on a burner face, adjust the air gas mixture as follows: On the side of the blower housing opposite the motor is a plate with a locking nut. Loosen the nut enough to allow the plate to be moved, then

adjust the position of the plate to open or close the air intake opening until a bright orange-red glow is obtained. Carefully hold the plate in position and tighten the locking nut.

3.4 Shutting the Fryer Down

For short-term shut down during the workday, place the controller ON/OFF switch in the **OFF** position and put the frypot covers in place (if the fryer is so equipped).

When shutting the fryers down at closing time, place the controller ON/OFF switch in the **OFF** position. Then place the gas valve in the off position. See illustration below.

For CE or UKCA Fryers	For Non-CE Fryers
Placing the ON/OFF switch in the OFF position also turns off the gas valve.	After placing the ON/OFF switch in the OFF position, turn the gas valve knob to the OFF position.

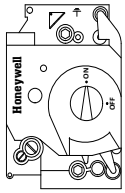

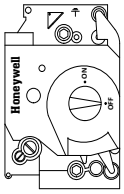

Put the frypot covers in place (if the fryer is so equipped).

PRO H55 SERIES GAS FRYERS
CHAPTER 4: FILTRATION INSTRUCTIONS

⚠ WARNING
The on-site supervisor is responsible for ensuring that operators are made aware of the inherent hazards of operating a hot oil filtering system, particularly the aspects of oil filtration, draining and cleaning procedures.

4.1 Draining and Manual Filtering

⚠ DANGER
Draining and filtering of cooking oil must be accomplished with care to avoid the possibility of a serious burn caused by careless handling. The oil to be filtered is at or near 350°F (177°C). Ensure all hoses are connected properly and drain handles are in their proper position before operating any switches or valves. Wear all appropriate safety equipment when draining and filtering cooking oil.

⚠ DANGER
Allow oil to cool to 100°F (38°C) before draining into an appropriate container for disposal.

⚠ DANGER
Do not drain more than one frypot at a time into the built-in filtration unit to avoid overflow and spillage of hot oil.

⚠ DANGER
When draining oil into a disposal unit or portable filter unit, do not fill above the maximum fill line located on the container.

If your fryer is not equipped with a built-in filtration system, the cooking oil must be drained into another suitable container. (For safe, convenient draining and disposal of used cooking oil, Frymaster recommends using the Frymaster Shortening Disposal Unit (SDU). The SDU is available through your local distributor.)

1. Turn the fryer power switch to the **OFF** position. Screw the drainpipe (provided with your fryer) into the drain valve. Make sure the drainpipe is firmly screwed into the drain valve and that the opening is pointing down.

2. Position a metal container with a sealable cover under the drainpipe. The metal container must be able to withstand the heat of the cooking oil and hold hot liquids. If you intend to reuse the oil, Frymaster recommends that a Frymaster filter cone holder and filter cone be used when a filter machine is not available. If you are using a Frymaster filter cone holder, be sure that the cone holder rests securely on the metal container.

3. Open the drain valve slowly to avoid splattering. If the drain valve becomes clogged with food particles, use the Fryer's Friend (poker-like tool) to clear the blockage.

⚠ DANGER

NEVER attempt to clear a clogged drain valve from the front of the valve! Hot oil will rush out creating the potential for severe burns.

DO NOT hammer on the drain valve with the cleanout rod or other objects. Damage to the ball inside will result in leaks and will void the Frymaster warranty.

4. After draining the oil, clean all food particles and residual oil from the frypot. BE CAREFUL, this material may still cause severe burns if it comes in contact with bare skin.

5. Close the drain valve securely and fill the frypot with clean, filtered or fresh cooking oil or solid shortening to the bottom OIL-LEVEL line.

⚠ DANGER

When using solid shortening, pack the shortening down into the bottom of the frypot. DO NOT operate the fryer with a solid block of shortening sitting in the upper portion of the frypot. This will cause damage to the frypot and may cause a flash fire.

4.2 Preparing the Built-In Filtration System for Use

The FootPrint Pro filtration system allows the oil in one frypot to be safely and efficiently filtered while the other frypots in a battery remain in operation. The FootPrint Pro filtration system is available in three different configurations:

- Filter Paper – includes crumb tray, large hold-down ring, and metal filter screen.
- Filter Pad – includes crumb tray, small hold-down ring, and metal filter screen.
- Magnasol Filter – includes crumb tray and Magnasol filter assembly.

Section 4.2.1 covers preparation of the Filter Paper and Filter Pad configurations for use. Refer to Section 4.2.2 for instructions on preparing the Magnasol Filter configuration for use. Operation of all three configurations is the same and is covered in section 4.3. Disassembly and reassembly of the Magnasol filter is covered in section 4.4.

4.2.1 Preparation for Use with Filter Paper or Filter Pad

1. Pull the filter pan out from the cabinet and remove the crumb tray, hold-down ring, filter paper and filter screen. (See Figure 1) Clean all components with a solution of detergent and hot water then dry thoroughly.

   The filter pan is equipped with rollers in rails, much like a kitchen drawer. The pan may be removed for cleaning or to gain access to interior components by lifting the front of the pan to disengage the front rollers, then pulling it forward until the rear rollers clear the rails. The pan cover must not be removed except for cleaning, interior access, or to allow a shortening disposal unit (SDU) to be positioned under the drain.

2. Inspect the filter pan connection fitting to ensure that both O-rings are in good condition. (See Figure 2)

3. Then in reverse order, place the metal filter screen in the center of the bottom of the pan, then lay a sheet of filter paper on top of the screen, overlapping on all sides. (See Figure 1) If using a filter pad, ensure the rough side of the pad is up and lay the pad over the screen, making sure that the pad is in between the embossed ridges of the filter pan.

4. Position the hold-down ring over the filter paper and lower the ring into the pan, allowing the paper to rest on the side of the filter pan. (See Figure 3)

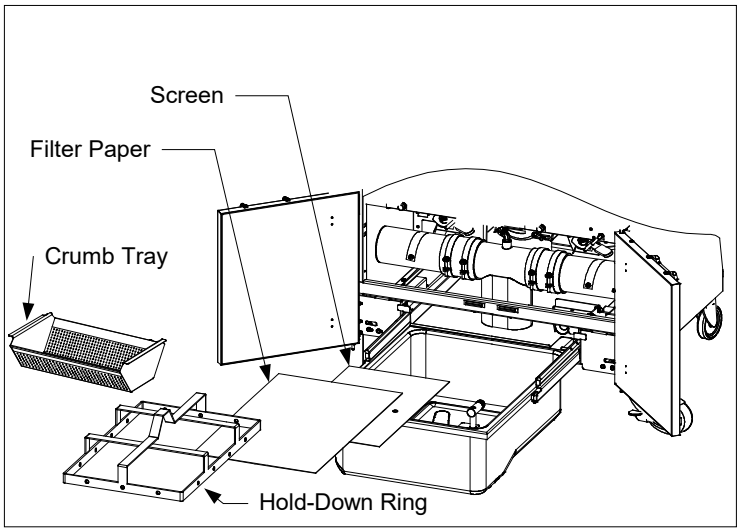

Figure 1

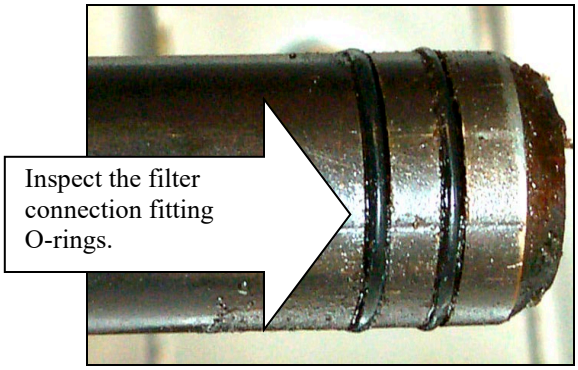

Figure 2

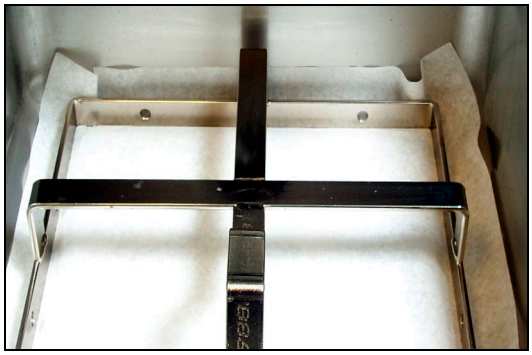

Figure 3

5. When the hold-down ring is in position, if using filter paper, sprinkle one cup of filter powder evenly over the paper. (See Figure 4)

   If using a filter pad, position the hold down ring on top of the pad. *DO NOT use filter powder with the pad.*

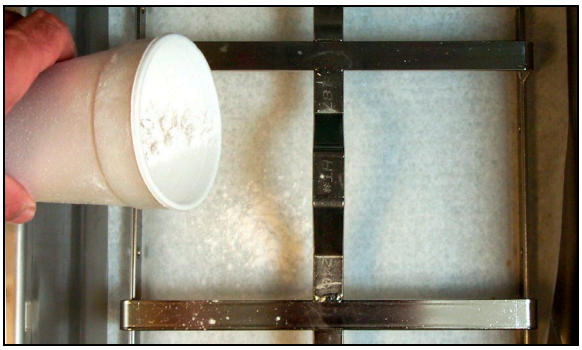

Figure 4

6. Replace the crumb tray in the filter pan, then push the filter pan back into the fryer, positioning it all the way to the back of the cabinet.

4.2.2 Preparation for Use with the Magnasol Filter Assembly

1. Pull the filter pan out from the cabinet and remove the crumb tray and Magnasol filter assembly. (See Figure 5)

   The filter pan is equipped with rollers in rails, much like a kitchen drawer. The pan may be removed for cleaning or to gain access to interior components by lifting the front of the pan to disengage the front rollers, then pulling it forward until the rear rollers clear the rails. The pan cover must not be removed except for cleaning, interior access, or to allow a shortening disposal unit (SDU) to be positioned under the drain.

   NOTE: Refer to Section 4.4 for instructions on how to disassemble and reassemble the Magnasol filter screen assembly.

Figure 5

2. Inspect the fitting on the bottom of the Magnasol filter assembly to ensure that the O-ring is present and in good condition. (See Figure 6)

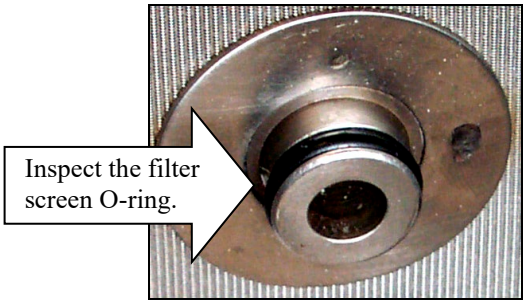

Figure 6

3. Inspect the filter pan connection fitting to ensure that both O-rings are present and in good condition. (See Figure 7)

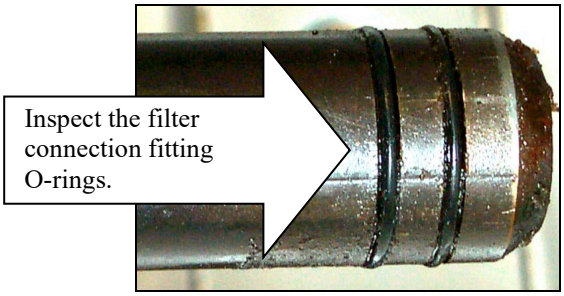

Figure 7

4. Replace the Magnasol filter assembly in the filter pan, ensuring that the fitting on the bottom of the assembly is securely seated in the port in the bottom of the pan. Sprinkle one cup of the Magnasol XL filter powder evenly over the screen.

5. Replace the crumb tray, then push the filter pan back into the fryer, positioning it all the way to the back of the cabinet.

4.3 Operation of the Filter

⚠ DANGER

Draining and filtering of cooking oil must be accomplished with care to avoid the possibility of a serious burn caused by careless handling. The oil to be filtered is at or near 350°F (177°C). Ensure drain handles are in their proper position before operating any switches or valves. Wear all appropriate safety equipment when draining and filtering cooking oil.

⚠ DANGER

NEVER attempt to drain cooking oil from the fryer with the burners lit! Doing so will cause irreparable damage to the frypot and may cause a flash fire. Doing so will also void the Frymaster warranty.

1. Turn the fryer power OFF. Drain the frypot into the filter pan by rotating the valves counter clockwise to the right. If necessary, use the ***Fryer's Friend*** clean-out rod to clear the drain from **inside** the frypot.

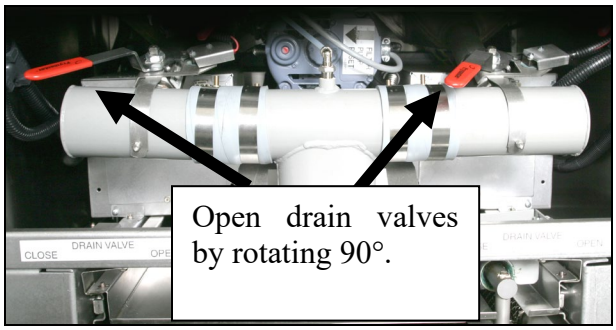

⚠ DANGER

Do not drain more than one frypot at a time into the built-in filtration unit to avoid overflow and spillage of hot oil.

⚠ DANGER

NEVER attempt to clear a clogged drain valve from the front of the valve! Hot oil will rush out creating the potential for severe burns.

DO NOT hammer on the drain valve with the cleanout rod or other objects. Damage to the ball inside will result in leaks and will void the Frymaster warranty.

2. If an optional Power Shower is included, install it now. **NOTE:** Verify that the Power Shower O-ring and gasket are present and in good condition and that the clean-out screws are installed at each corner.

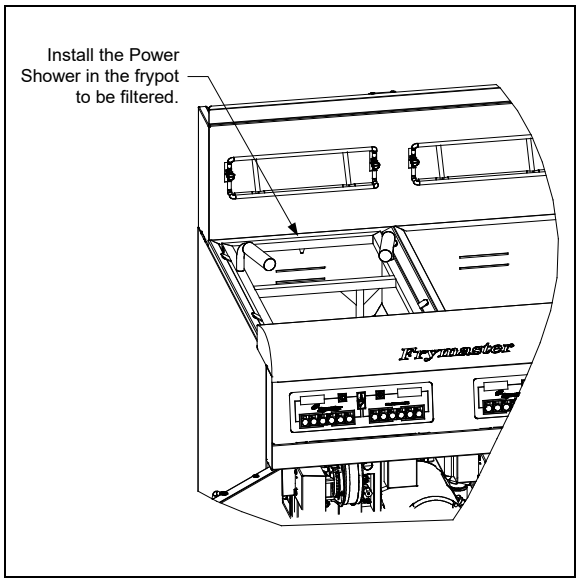

Snap the optional Power Shower into position.

⚠ DANGER

If the fryer includes a Power Shower, DO NOT operate the filter without the Power Shower in place. Hot oil will spray out of the fryer and cause injury.

3. After the cooking oil has drained from the frypot, pull the filter handle forward (outward) to start the pump and begin the filtering process. There may be a slight delay before the pump activates.

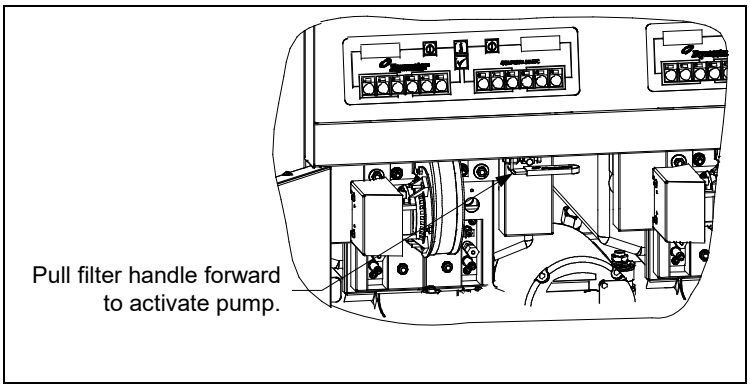

4. The filter pump draws the cooking oil through the filter medium and circulates it back up to and through the frypot during a 5-minute process called polishing. Polishing cleans the oil by trapping solid particles in the filter medium.

5. After the oil is filtered (about 5 minutes), close the drain valve and allow the fryer to refill. Let the filter pump run 10 to 12 seconds after the oil begins to bubble (or sputter from the Power Shower openings, if installed). Turn the filter off, remove the Power Shower if installed, and let it drain.

⚠ WARNING

The filter pump is equipped with a manual reset switch in case the filter motor overheats or an electrical fault occurs. If this switch trips, turn off power to the filter system and allow the pump motor to cool 20 minutes before attempting to reset the switch (see photo below).

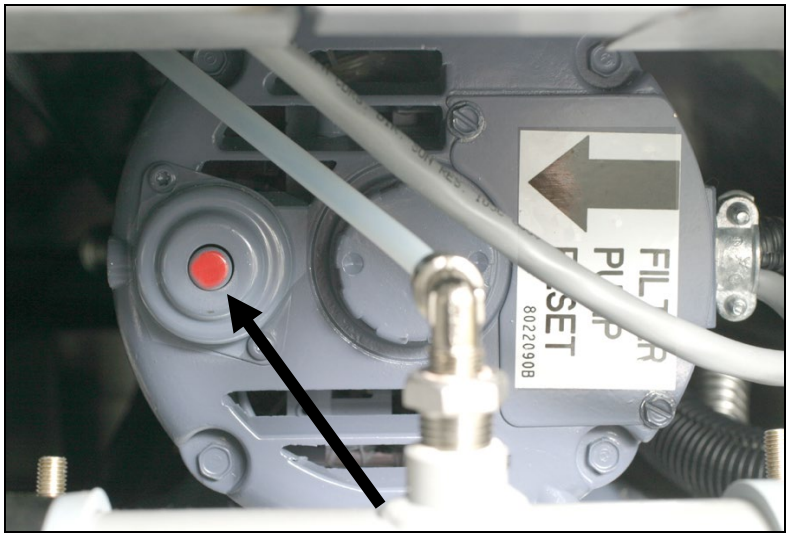

Filter Pump Reset Switch

6. Ensure the drain valve is fully closed. (If the drain valve is not fully closed, the fryer will not operate.) Turn the fryer ON and allow the cooking oil to reach setpoint.

⚠ DANGER

The crumb tray in fryers equipped with a filter system must be emptied into a fireproof container at the end of frying operations each day. Some food particles can spontaneously combust if left soaking in certain shortening material.

⚠ WARNING

Do not bang fry baskets or other utensils on the fryer's joiner strip. The strip is present to seal the joint between the fry vessels. Banging fry baskets on the strip to dislodge shortening will distort the strip, adversely affecting its fit. It is designed for a tight fit and should only be removed for cleaning.

4.4 Disassembly and Reassembly of the Magnasol Filter

Dissassembly

1. Grasp the frame with your thumbs on the handles at the corner of the assembly and pull outward in opposite directions to separate the frame at the corner. Continue to open the frame (it will pivot at the opposite corner) until the outer screens and grid can be removed from the frame.

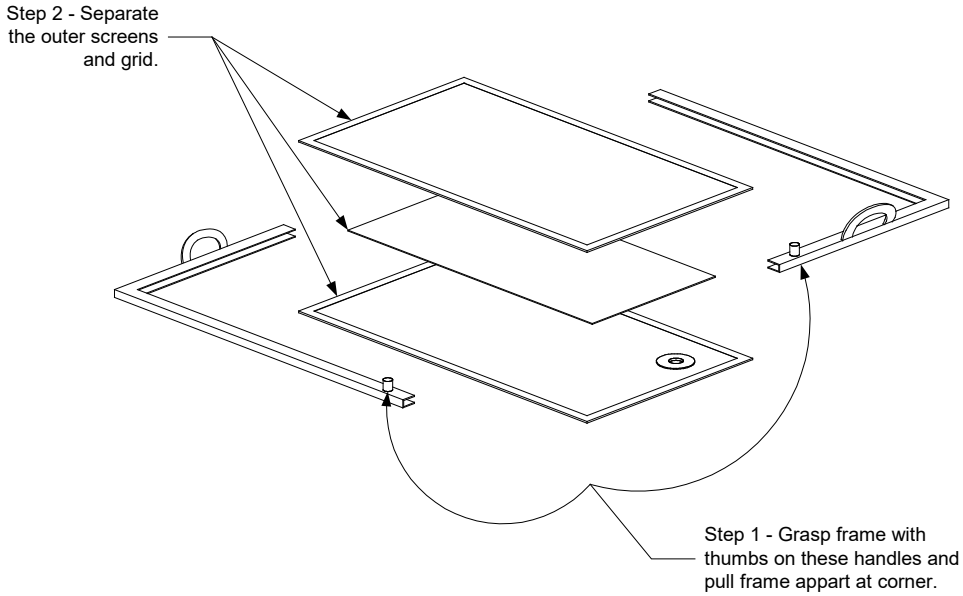

2. Separate the outer screens and grid.

Cleaning

1. Clean the two frame pieces, outer screens, and grid using a good quality degreaser and hot water from a spray nozzle. The groove in the seal frame pieces can be cleaned with the edge of a Scotch-Brite™ or similar cleaning pad.

2. At each scheduled boil-out, disassemble the leaf filter assembly and place in the frypot being boiled out. Follow the boil-out procedure in Section 5.1.2 of this manual.

3. Allow all filter assembly components to air dry or thoroughly dry with clean towels before reassembling.

Reassembly

1. Place the two outer screens together and align their edges (see illustration on following page).

2. Insert the screens into one of the frame halves (it doesn't matter which one). Ensure that the fitting in the bottom screen is on the opposite side of the frame from the handle.

3. Slip the grid between the screens, ensuring that the grid is centered between the edges of the screens.

4. Connect the other half of the frame at the corner opposite the handles and pivot the frame onto the free edges of the screen.

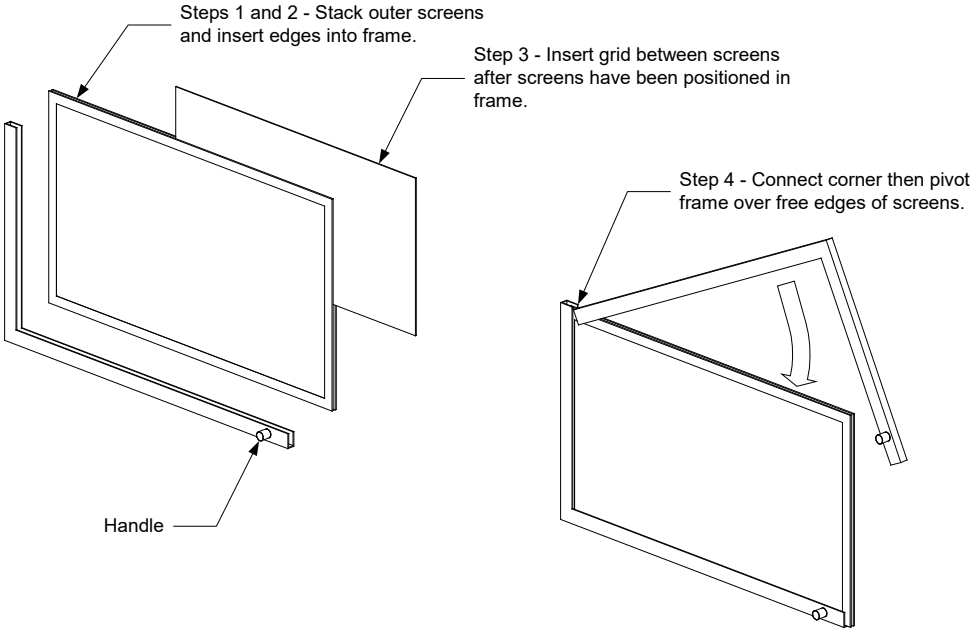

4.5 Draining and Disposing of Waste Oil

When your cooking oil has reached the end of its usable life, drain the oil into an appropriate container for transport to the disposal container. Frymaster recommends the use of the Frymaster Shortening Disposal Unit (SDU). **NOTE:** If using an SDU built before January 2004 the filter pan cover must be removed to allow the unit to be positioned beneath the drain. To remove the lid, lift up on the front edge and pull it straight out of the cabinet. Refer to the documentation furnished with your disposal unit for specific operating instructions. If a shortening disposal unit is not available, allow the oil to cool to 100°F (38°C), then drain the oil into a metal stockpot or similar metal container. When draining is finished, close the fryer drain valve securely.

⚠ DANGER

Allow oil to cool to 100°F (38°C) before draining into an appropriate container for disposal.

When draining oil into a disposal unit, do not fill above the maximum fill line located on the container.

4.6 Using the Optional Rear-Discharge Oil Disposal

1. Ensure the filter pan is clean and ready for filtering. DO NOT discharge oil through a dirty or incomplete filter pan.
2. Ensure the oil is at operating temperature.
3. Turn the fryer off. Wear protective clothing and use caution. Hot oil can cause serious injury.
4. Open the drain valve of the frypot with oil to be discarded. Drain only one frypot at a time.
5. With the frypot drained and the oil to be discarded in the filter pan, close the drain valve. Ensure all other drain valves and oil-return valves are closed.
6. Ensure the oil disposal reservoir is not full and the fryer is properly connected to the oil disposal system.
7. Discharge the oil by pressing down or pulling on the discharge valve handle, depending on handle type and date of manufacture. The filter pump will come on and the oil will be pumped from the filter pan. Turn the pump off by lifting or pushing the discharge handle, depending on handle type and date of manufacture, to the off position when the filter pan empties. Repeat steps 1-7 if necessary to discharge the oil from other frypots. DO NOT discharge water or other liquids through the filter system.
8. Refill the fryer with fresh oil.

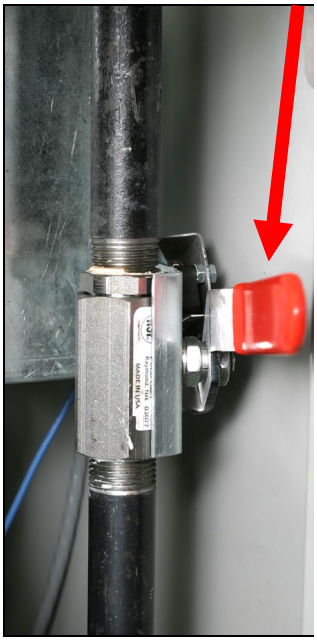

Earlier oil discharge valve handle is shown in the OFF position. Push down to discharge oil from the filter pan.

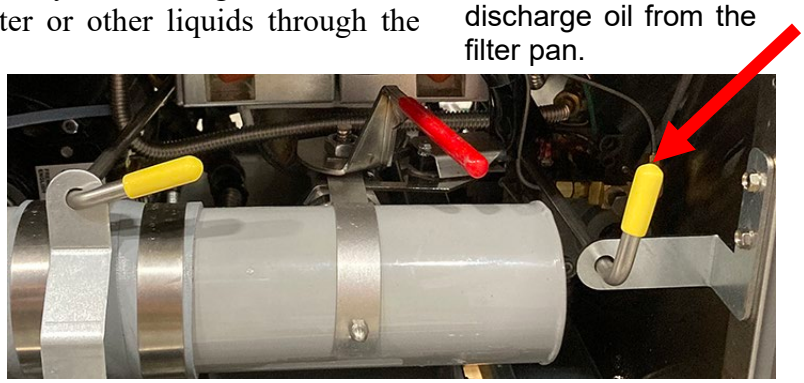

Later oil discharge valve handle is shown in the OFF position. Pull to discharge oil from the filter pan.

PRO H55 SERIES GAS FRYERS
CHAPTER 5: PREVENTIVE MAINTENANCE

5.1 Fryer Preventive Maintenance Checks and Service

DAILY CHECKS AND SERVICE

Inspect Fryer and Accessories for Damage

Look for loose or frayed wires and cords, leaks, foreign material in frypot or inside cabinet, and any other indications that the fryer and accessories are not ready and safe for operation.

Clean Fryer Cabinet Inside and Out

Clean inside the fryer cabinet with dry, clean cloth. Wipe all accessible metal surfaces and components to remove accumulations of oil or shortening and dust.

Clean the outside of the fryer cabinet with a clean, damp cloth soaked with dishwashing detergent, removing oil, dust, and lint from the fryer cabinet.

⚠ DANGER
Never attempt to clean fryer during the cooking process or when the frypot is filled with hot oil. If water comes in contact with oil heated to cooking temperature, it can cause the oil to splatter and severely burn nearby personnel.

WEEKLY CHECKS AND SERVICE

Drain and Clean Frypot

During normal usage of your fryer, a deposit of carbonized cooking oil will gradually form on the inside of the frypot. This deposit must be periodically removed to maintain your fryer's efficiency.

⚠ DANGER
Allow oil to cool to 100ºF (38ºC) or lower before draining to an appropriate container for disposal.

1. Drain the frypot in accordance with Section 4.1 (page 4-1), *but do not refill with cooking oil*.

2. After draining the frypot, clean all food particles and residual oil from the frypot and filter pan (if so equipped). BE CAREFUL, this material may still cause severe burns if it comes in contact with bare skin.

3. Close the drain valve securely and fill the frypot with a solution of automatic dishwasher detergent and water (or commercially available boil-out solution) to the bottom OIL-LEVEL line.

4. Set the thermostat to 195ºF (91ºC) or program the computer for boil out (see separate *Frymaster Fryer Controllers User's Manual*) and simmer the solution for 1 hour.

⚠ WARNING
Never leave the fryer unattended during this process. If the solution overflows, press the ON/OFF switch to the OFF position immediately.

5. After the solution has simmered for 1 hour, press the ON/OFF switch to the OFF position and allow the solution to cool.

6. Drain the solution into a suitable container **(NOT the built-in filtration system filter pan or the Shortening Disposal Unit)** and thoroughly wipe the frypot with a clean towel.

7. Close the drain valve and fill the frypot with clean, cold water and drain into a suitable container **(NOT the built-in filtration system filter pan or the Shortening Disposal Unit)**. Repeat the rinse process again, and then wipe frypot with a clean, dry towel.

⚠ DANGER
Ensure that the frypot is completely free of water before filling with cooking oil or shortening. When the oil or shortening is heated to cooking temperature, water in the frypot will cause splattering.

Clean Filter Pan, Detachable Parts and Accessories

As with the frypot, a deposit of carbonized oil will accumulate on the filter pan and detachable parts and accessories such as baskets, sediment trays, or fish plates.

Wipe the filter pan and all detachable parts and accessories with a clean cloth dampened with a detergent solution (or the parts can be run through a dishwasher). Rinse and thoroughly dry each part. DO NOT use steel wool or abrasive pads to clean these parts. The scratches that result from such scrubbing make subsequent cleanings more difficult.

⚠ WARNING
Use a commercial-grade cleaner formulated to effectively clean and sanitize food-contact surfaces. Read the directions for use and precautionary statements before use. Particular attention must be paid to the concentration of cleaner and the length of time the cleaner remains on the food-contact surfaces.

MONTHLY CHECKS AND SERVICE

Check Calibration of Analog Controller Thermostat Control Knob

(This check applies only to units equipped with Analog Controllers)

1. Insert a good-grade thermometer or pyrometer probe into the oil, with the end touching the fryer temperature-sensing probe and set the thermostat knob to frying temperature.

2. After the set temperature is reached, let the burner cycle on and off automatically three times to allow the cooking oil temperature to become uniform. If necessary, stir to get all shortening in the bottom of the frypot melted.

3. When the burner starts for the fourth time, the thermometer/pyrometer reading should be within ± 5ºF (2ºC) of the thermostat knob setting. If it is not, calibrate as follows:

   a. Loosen setscrew in thermostat control knob until the knob will rotate freely on its shaft.

   b. Rotate the knob until the index line on the knob is aligned with the marking that corresponds to the thermometer or pyrometer reading.

   c. Hold the knob and carefully tighten the setscrew.

   d. Recheck the thermometer/pyrometer reading against the thermostat knob setting the next time the burner lights.

   e. Repeat steps 3.a. through 3.d. until the thermometer/pyrometer reading and knob setting agree within ± 5ºF (2ºC). **If calibration cannot be obtained for any reason, call a Factory Authorized Service Center for assistance.**

5. Remove the thermometer or pyrometer.

Check Computer Magic III.5 Set Point Accuracy

(This check applies only to units equipped with Computer Magic III.5 Controllers.)

1. Insert a good-grade thermometer or pyrometer probe into the oil, with the end touching the fryer temperature-sensing probe.

2. When the computer display shows a series of four dashes "----" with no dot between the first and second dashes (indicating that the frypot contents are within the cooking range), press the 🌡 switch once to display the temperature of the cooking oil as sensed by the temperature probe.

3. Press the 🌡 switch twice to display the set point.

4. Note the temperature on the thermometer or pyrometer. All three readings should be within ± 5ºF (2ºC) of each other. If not, contact a Factory Authorized Service Center for assistance.

QUARTERLY CHECKS AND SERVICE

Clean Combustion Air Blower Assembly

1. Disconnect the blower wiring harness and remove the four blower mounting nuts.

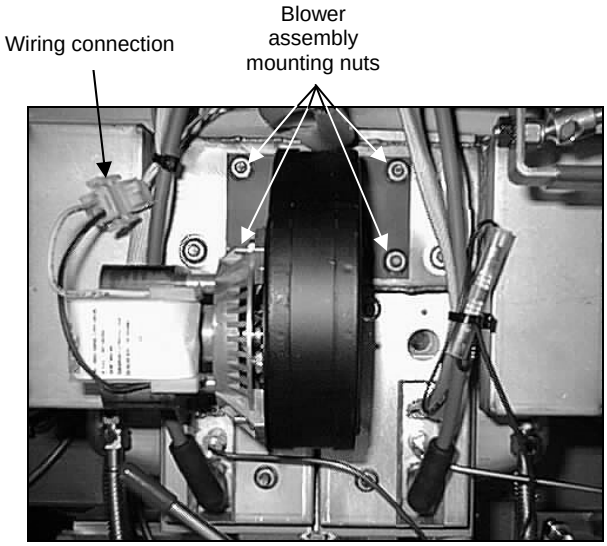

2. Remove the three fasteners that secure the blower motor assembly to the blower housing, and separate the two components.

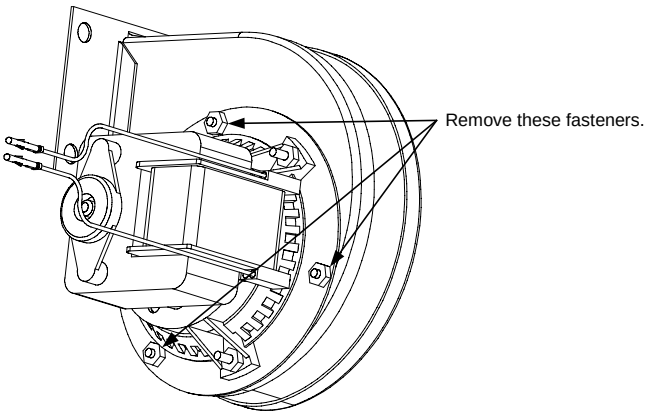

3. Wrap the motor with plastic wrap to prevent water from entering it. Spray degreaser or detergent on the blower wheel and the blower housing. Allow it to soak for five minutes. Rinse the wheel and housing with hot tap water, then dry with a clean cloth.

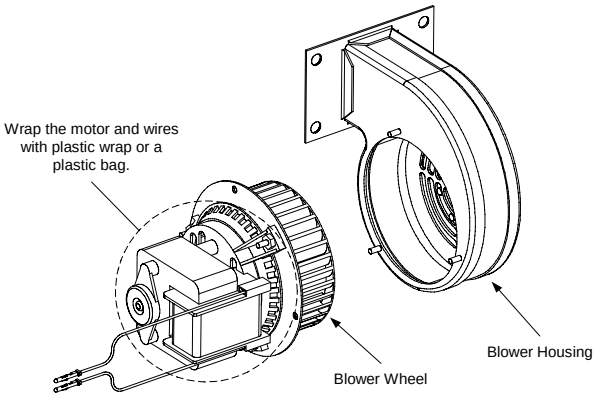

4. Remove the plastic wrap from the blower motor assembly. Reassemble the blower motor assembly and blower housing. Reinstall the blower assembly in the fryer.

5. Reinstall the blower shield or shield assembly.

6. Light the fryer in accordance with the procedure described in Chapter 3, Section 3.1.

7. After the burners have been lit for at least 90 seconds, observe the flames through the burner viewing ports located on each side of the combustion air blower.

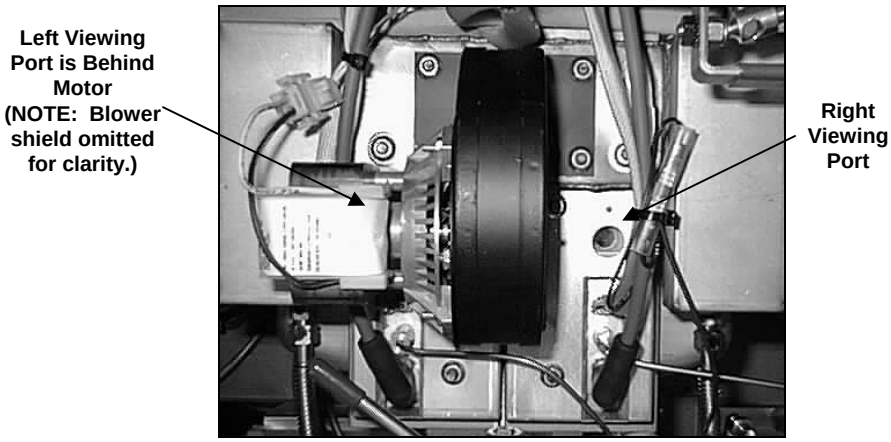

The air/gas mixture is properly adjusted when the burner manifold pressure is in accordance with the applicable table on page 2-7 and the burners display a bright orange-red glow. If a blue flame is observed, or if there are dark spots on a burner face, the air/gas mixture requires adjustment.

On the side of the blower housing opposite the motor is a plate with one or two locking nuts. Loosen the nut(s) enough to allow the plate to be moved, then adjust the position of the plate to open or close the air intake opening until a bright orange-red glow is obtained. Carefully hold the plate in position and tighten the locking nut(s).

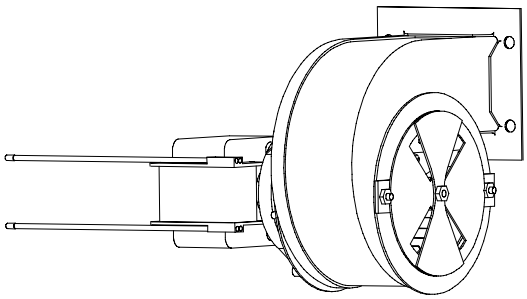

TYPICAL BLOWER ASSEMBLY

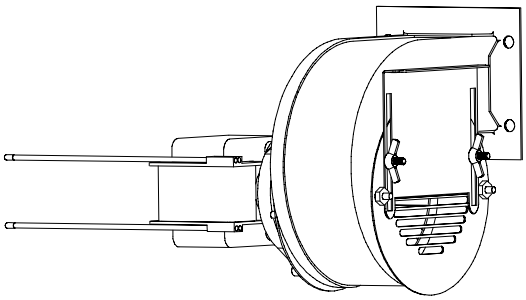

SOME CE BLOWER ASSEMBLIES MAY BE CONFIGURED THIS WAY

SEMI-ANNUAL CHECKS AND SERVICE

Clean Gas Valve Vent Tube

NOTE: This procedure is not required for fryers configured for export to CE countries.

1. Set the fryer power switch and the gas valve to the OFF position.
2. Carefully unscrew the vent tube from the gas valve. **NOTE:** The vent tube may be straightened for ease in removal.
3. Pass a piece of ordinary binding wire (.052 inch diameter) through the tube to remove any obstruction.
4. Remove the wire and blow through the tube to ensure it is clear.
5. Reinstall the tube and bend it so that the opening is pointing downward.

Check Burner Manifold Pressure

⚠ DANGER
This task should be performed by qualified service personnel only. Contact your FAS to arrange this service.

5.2 Built-in Filtration System Preventive Maintenance Checks and Service

⚠ WARNING
Never operate the filter system without cooking oil or shortening in the system.

⚠ WARNING
Never use the filter pan to transport old oil to the disposal area.

⚠ WARNING
Never drain water into the filter pan. Water will damage the filter pump.

There are no periodic preventive maintenance checks and services required for your FootPrint Pro Filtration System other than daily cleaning of the filter pan with a solution of hot water and detergent.

If you notice that the system is pumping slowly or not at all, verify that the filter pan screen is on the bottom of the filter pan, with the paper on top of the screen. (If the unit is equipped with a Magnasol filter screen rather than with the standard screen and paper system, verify that the O-ring on the bottom fitting of the screen in present and in good condition.) Verify that the two O-ring(s) on the fitting at the right front of the filter pan are present and in good condition.

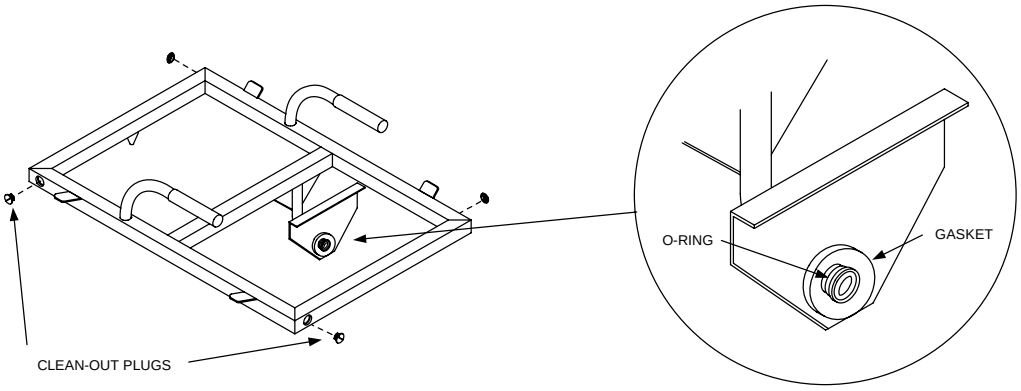

If the system is equipped with a Power Shower, drain the Power Shower completely after each use. If oil is leaking at the point where the Power Shower plugs into the frypot, verify that the O-ring and gasket on the connection fitting are present and in good condition. If you suspect blockage, unscrew the clean-out plugs at each corner of the frame. Place the frame in a pan of hot water for several minutes to melt any accumulation of solidified oil/shortening. Use a long, narrow bottlebrush with hot water and detergent to clean inside the tubes. If necessary, insert a straightened paper clip or similarly sized wire into the holes in the frame to remove any solidified shortening or other blockages. Rinse with hot water, dry thoroughly, and reinstall the plugs before using.

⚠ DANGER

Failure to reinstall the clean-out plugs in the Power Shower will cause hot oil to spray out of the frypot during the filtering process, creating an extreme burn hazard to personnel.

5.3 Annual/Periodic System Inspection

This appliance should be inspected and adjusted periodically by qualified service personnel as part of a regular kitchen maintenance program.

Frymaster <u>recommends</u> that a Factory Authorized Servicer inspect this appliance at least annually as follows:

Fryer

- Inspect the cabinet <u>inside and out, front and rear</u> for excessive oil.
- Verify that the flue opening is not obstructed by debris or accumulations of solidified oil or shortening.
- Verify that burners and associated components (i.e. gas valves, pilot assemblies, ignitors, etc.) are in good condition and functioning properly. Inspect all gas connections for leaks and verify that all connections are properly tightened.
- Verify that the burner manifold pressure is in accordance with that specified on the appliance's rating plate.

- Verify that the temperature and high-limit probes are properly connected, tightened and functioning properly, and that probe guards are present and properly installed.

- Verify that component box components (i.e. computer/controller, transformers, relays, interface boards, etc.) are in good condition and free from oil and other debris. Inspect the component box wiring and verify that connections are tight and that wiring is in good condition.

- Verify that all safety features (i.e. drain safety switches, reset switches, etc.) are present and functioning properly.

- Verify that the frypot is in good condition and free of leaks and that the frypot insulation is in serviceable condition.

- Verify that wiring harnesses and connections are tight and in good condition.

Built-In Filtration System

- Inspect all oil-return and drain lines for leaks and verify that all connections are tight.

- Inspect the filter pan for leaks and cleanliness. If there is a large accumulation of crumbs in the crumb basket, advise the owner/operator that the crumb basket should be emptied into a fireproof container and cleaned daily.

- Verify that all O-rings and seals (including those on the Power Shower if applicable and on the quick-disconnect fitting) are present and in good condition. Replace O-rings and seals if worn or damaged.

- Check filtration system integrity as follows:

  – Verify that filter pan cover is present and properly installed.

  – With the filter pan empty, place each oil return handle, one at a time, in the ON position. Verify that the pump activates and that bubbles appear in the cooking oil/shortening (or that gurgling is heard from the Power Shower port if applicable) of the associated frypot.

  – Close all oil return valves (i.e., place all oil return handles in the OFF position). Verify proper functioning of each oil return valve by activating the filter pump using the lever on one of the oil return microswitches. No air bubbles should be visible in any frypot (or no gurgling should be heard from the Power Shower ports if applicable).

  – Verify that the filter pan is properly prepared for filtering, then drain a frypot of oil heated to 350°F (177°C) into the filter pan and close the frypot drain valve. Place the oil return handle in the ON position. Allow all cooking oil to return to the frypot (indicated by bubbles in the cooking oil or on units with Power Showers, cessation of oil flow from the Power Shower). Return the oil return handle to the OFF position. The frypot should have refilled in no more than 2 minutes and 30 seconds.

PRO H55 SERIES GAS FRYERS
CHAPTER 6: OPERATOR TROUBLESHOOTING

6.1 Introduction

This chapter provides an easy reference guide to some of the common problems that may occur during the operation of your equipment. The troubleshooting guides that follow are intended to help you correct, or at least accurately diagnose, problems with your equipment. Although the chapter covers the most common problems reported, you may encounter problems that are not covered. In such instances, the Frymaster Technical Services staff will make every effort to help you identify and resolve the problem.

When troubleshooting a problem, always use a process of elimination starting with the simplest solution and working through to the most complex. Most importantly, always try to establish a clear idea of why a problem has occurred. Part of your corrective action involves taking steps to ensure that it doesn't happen again. If a controller malfunctions because of a poor connection, check all other connections while you're at it. If a fuse continues to blow, find out why. Always keep in mind that failure of a small component may often be indicative of potential failure or incorrect functioning of a more important component or system.

Some of the troubleshooting actions that are recommended in this chapter involve removing suspect components and substituting components that are known to be good. Whenever this in indicated, refer to Sections 6.6 for specific instructions

If you are in doubt as to the proper action to take, do not hesitate to call the Frymaster Technical Service Department or your local Frymaster Factory Authorized Service Center for assistance.

Before calling a servicer or the Frymaster HOTLINE (1-800-551-8633):

- **Verify that electrical cords are plugged in and that circuit breakers are on.**
- **Verify that gas line quick-disconnects are properly connected.**
- **Verify that any gas line cutoff valves are open.**
- **Verify that frypot drain valves are fully closed.**

⚠ DANGER

Hot cooking oil will cause severe burns. Never attempt to move this appliance when filled with hot cooking oil or to transfer hot cooking oil from one container to another.

⚠ DANGER

This equipment should be unplugged when servicing, except when electrical circuit tests are required. Use extreme care when performing such tests.

This appliance may have more than one electrical power supply connection point. Disconnect all power cords before servicing.

Inspection, testing, and repair of electrical components should be performed by an authorized servicer only.

6.2 Troubleshooting Fryers with Computer Magic III.5, Basket Lift Timer, or Digital Controller

PROBLEM	PROBABLE CAUSES	CORRECTIVE ACTION
No display on computer or controller.	A. Controller not turned on.	A. Press the ON/OFF switch to turn the controller on.
	B. No power to fryer.	B. Verify that the fryer is plugged in and that the circuit breaker is not tripped.
	C. Damaged computer/controller wiring harness.	C. If available, substitute a harness known to be good for the suspect harness. If the fryer functions correctly, order replacement harness from FAS.
	D. Failed computer/controller.	D. If available, substitute a computer/controller known to be working for the suspect computer/controller. If the fryer functions correctly, order replacement from FAS.
Display shows Prob with alarm sounding.	Damaged computer/controller wiring harness or connector.	If available, substitute a harness known to be good for the suspect harness. If the fryer functions correctly, order replacement harness from FAS.
Display shows HELP with alarm sounding. Heating indicator is on, but burners will not light.	A. Drain valve not fully closed.	A. Press the ON/OFF switch off, close the drain valve(s) completely, then press the ON/OFF switch on.
	B. Gas valve is not turned on.	B. Turn the gas valve knob to the **ON** position.
	C. Manual gas shut off valve closed.	C. Verify that any in-line manual shut off valve is open. Verify that gas main cut off valve is open.
	D. Improperly connected quick-disconnect fitting on gas line.	D. Verify that the quick-disconnect fitting on the flexible gas line is firmly connected to the fryer.
	E. Obstructed or failed combustion air blower.	E. Verify that combustion air blower is running. If not, call FAS for service. If combustion air blower is functional, clean and adjust per instructions in Chapter 5 of this manual.

PROBLEM	PROBABLE CAUSES	CORRECTIVE ACTION
Display shows Lo, heating indicator cycles on and off normally, but burners will not light and blower is not running.	A. Failed computer/controller.	A. If available, substitute a computer/controller known to be working for the suspect computer/controller. If the fryer functions correctly, order replacement from FAS.
	B. Damaged computer/controller wiring harness.	B. If available, substitute a harness known to be good for the suspect harness. If the fryer functions correctly, order replacement harness from FAS.
Fryer is slow coming out of melt cycle. Display shows HELP a short time after coming out of melt cycle.	Dirty or obstructed combustion air blower.	Clean and adjust per instructions in Chapter 5 of this manual.
Fryer is operating normally, but recovery is slow when cooking.	Dirty or obstructed combustion air blower.	Clean and adjust per instructions in Chapter 5 of this manual.
Fryer is operating normally, but produces a popping sound when burners ignite.	A. Dirty or obstructed combustion air blower.	A. Clean and adjust per instructions in Chapter 5 of this manual.
	B. Dirty or obstructed gas valve vent tube (non-CE fryers only).	B. Clean per instructions in Chapter 5 of this manual.
	C. Malfunctioning combustion air blower.	C. If blower is slow to come up to speed, contact FAS for service.
Display shows HELP and alarm sounds, but fryer operates normally (false alarm).	Failed computer/controller.	If available, substitute a computer/controller known to be working for the suspect computer/controller. If the fryer functions correctly, order replacement from FAS.
Computer will not go into program mode or some buttons do not actuate.	Failed computer/controller.	If available, substitute a computer/controller known to be working for the suspect computer/controller. If the fryer functions correctly, order replacement from FAS.
Heat indicator is on and blower is running, but burner will not ignite.	Blown fuse on interface board or ignition module.	Replace fuse.

PROBLEM	PROBABLE CAUSES	CORRECTIVE ACTION
Heat indicator off upon initial startup. Display shows HI or HOT with alarm sounding.	Failed computer/controller.	If available, substitute a computer/controller known to be working for the suspect computer/controller. If the fryer functions correctly, order replacement from FAS.

6.3 Troubleshooting Fryers with Solid State (Analog) Controller

PROBLEM	PROBABLE CAUSES	CORRECTIVE ACTION
Power switch ON, no lights on controller, fryer does not heat.	A. No power to fryer.	A. Verify that the fryer is plugged in and that the circuit breaker is not tripped.
	B. Damaged controller wiring harness.	B. If available, substitute a harness known to be good for the suspect harness. If the fryer functions correctly, order replacement harness from FAS.
	C. Failed controller.	C. If available, substitute a controller known to be working for the suspect controller. If the fryer functions correctly, order replacement from FAS.
Power light ON, trouble light ON, heating mode light OFF.	Damaged controller wiring harness.	If available, substitute a harness known to be good for the suspect harness. If the fryer functions correctly, order replacement harness from FAS.
Power light ON, trouble light ON, heating mode light ON. Burners do not ignite.	A. Drain valve not fully closed.	A. Press the ON/OFF switch off, close the drain valve(s) completely, then press the ON/OFF switch on.
	B. Gas valve is not turned on.	B. Turn the gas valve knob to the **ON** position.
	C. Manual gas shut off valve closed.	C. Verify that any in-line manual shut off valve is open. Verify that gas main cut off valve is open.
	D. Improperly connected quick-disconnect fitting on gas line.	D. Verify that the quick-disconnect fitting on the flexible gas line is firmly connected to the fryer.
	E. Obstructed or failed combustion air blower.	E. Verify that combustion air blower is running. If not, call FAS for service. If combustion air blower is functional, clean and adjust per instructions in Chapter 5 of this manual.

PROBLEM	PROBABLE CAUSES	CORRECTIVE ACTION
Heating mode light cycles on and off normally. Blower not running and burners will not ignite.	A. Failed controller.	A. If available, substitute a controller known to be working for the suspect controller. If the fryer functions correctly, order replacement from FAS.
	B. Damaged controller wiring harness.	B. If available, substitute a harness known to be good for the suspect harness. If the fryer functions correctly, order replacement harness from FAS.
Fryer is slow coming out of melt cycle. Heating mode light is ON. Trouble light comes on a short time after coming out of melt cycle.	Dirty or obstructed combustion air blower.	Clean and adjust per instructions in Chapter 5 of this manual.
Fryer is operating normally, but recovery is slow when cooking.	Dirty or obstructed combustion air blower.	Clean and adjust per instructions in Chapter 5 of this manual.
Fryer is operating normally, but produces popping sound when burners ignite.	A. Obstructed combustion air blower.	A. Clean and adjust per instructions in Chapter 5 of this manual.
	B. Dirty or obstructed gas valve vent tube (non-CE fryers only).	B. Clean per instructions in Chapter 5 of this manual.
	C. Malfunctioning combustion air blower.	C. If blower is slow to come up to speed, contact FAS for service.
Heating mode light is on and blower is running, but burner will not ignite.	Blown fuse on interface board or ignition module.	Replace fuse.
Heating mode light is cycling on and off normally and fryer is operating normally, but trouble light is on continuously (false alarm).	A. Failed controller.	A. If available, substitute a controller known to be working for the suspect controller. If the fryer functions correctly, order replacement from FAS.
	B. Damaged controller wiring harness.	B. If available, substitute a harness known to be good for the suspect harness. If the fryer functions correctly, order replacement harness from FAS.

PROBLEM	PROBABLE CAUSES	CORRECTIVE ACTION
Heating mode light is ON with power switch in OFF position. After initial startup, fryer continues to heat until trouble light comes on. Frypot temperature is above 410F (210°C).	Failed controller.	If available, substitute a controller known to be working for the suspect controller. If the fryer functions correctly, order replacement from FAS.

6.4 Troubleshooting the Built-in Filtration System

PROBLEM	PROBABLE CAUSES	CORRECTIVE ACTION
Pump won't start. **OR** **Pump stops during filtering.**	A. Thermal overload switch has tripped on an overheated motor. ***Test***: If the pump stopped suddenly during the filtering process, especially if after several filtering cycles, the pump motor has probably overheated. Place the filter handle in the OFF position, allow the pump to cool for at least 45 minutes, and then press the reset button on the pump motor. Attempt to activate the pump.	A. If the pump runs normally after resetting the thermal overload switch, the pump was overheated. Always filter with the cooking oil at or near frying temperature. Allow the pump motor to cool off for about ten minutes after filtering two full frypots one after the other. Check the filter paper between filterings. Replace the paper if there is a large accumulation of sediment.
	B. Failed filter handle microswitch. ***Test***: If this is a multi-pot fryer, attempt to operate the pump using a different handle. If the pump starts, the handle microswitch is either out of alignment or has failed. When the handle is placed in the ON position, the lever on the microswitch should be firmly pressed against the switch. If so, the switch has failed. If not, the switch is loose and/or misaligned.	B. If the switch is loose, tighten the nuts and bolts holding it in place, ensuring that when the handle is placed in the ON position, the lever on the microswitch is pressed firmly against the switch. If the switch has failed, call FAS.

PROBLEM	PROBABLE CAUSES	CORRECTIVE ACTION
(Continued from previous page.)	C. Pump blockage. ***Test***: Close the drain valve. Place the filter handle in the OFF position, allow the pump to cool for at least 45 minutes, and then press the reset button on the pump motor. Pull the filter pan from the unit and then activate the pump. If the pump motor hums and then stops, the pump is blocked.	C. Pump blockages are usually caused by sediment build-up in the pump due to improperly sized or installed filter paper and failure to use the crumb screen. Call FAS to have blockage cleared. Ensure that filter paper is of the proper size and is installed properly, and that the crumb screen is used.
Pump starts, but no transfer takes place or the transfer is very slow.	A. Cooking oil is too cold for filtering.	A. To properly filter, the oil should be at or near 350°F (177°C). At temperatures lower than this, the oil becomes too thick to pass through the filter medium easily, resulting in much slower oil return and eventual overheating of the filter pump motor.
	B. Improperly installed or prepared filter pan components. ***Test***: Close the drain valve. Move the filter handle to the OFF position, pull the filter pan (and Power Shower, if so equipped) from the unit. Move the filter handle to the ON position. If a strong stream of air is being pumped out of the oil return port (or the Power Shower port), the problem is with the filter pan components.	B. Remove the oil from the filter pan and replace the filter paper, ensuring that the filter screen is in place ***under*** the paper. C. If this does not correct the problem, the filter suction tube is probably blocked. Remove the blockage using a thin, flexible wire. If unable to remove the blockage, call FAS.
Power Shower is not spraying properly.	A. Plugged openings or solidified shortening in the Power Shower. ***Test***: Look for oil squirting out around the Power Shower gasket but not coming out of the holes around the frame. If so, Power Shower is obstructed.	A. Clean the Power Shower per instructions in Chapter 5 of this manual.
	B. Missing/worn o-rings and gasket on Power Shower.	B. Verify that o-rings and gasket are present and in good condition.

PROBLEM	PROBABLE CAUSES	CORRECTIVE ACTION
(Continued from previous page.)	C. Missing paper in filter pan. (This causes too much pressure in the oil return lines, resulting in a strong flow through the Power Shower, but also squirting of oil from around the gasket.)	C. Verify that filter paper is properly installed in the filter pan.

6.5 Troubleshooting the Basket Lift

PROBLEM	PROBABLE CAUSES	CORRECTIVE ACTION
Basket lift movement is jerky and/or noisy.	Basket lift rods need lubrication.	Lubricate basket lift rods with Lubriplate™ or equivalent light white grease.

THIS PAGE INTENTIONALLY LEFT BLANK

FRYMASTER
8700 LINE AVENUE, SHREVEPORT, LA 71106-6800

800-551-8633
318-865-1711
WWW.FRYMASTER.COM
EMAIL: FRYSERVICE@FRYMASTER.COM

©2026 Frymaster LLC. except where explicitly stated otherwise. All rights reserved. Continuing product improvement may necessitate change of specifications without notice.

Part Number FRY_IOM_8195991 09/2026